PRODUCT CATALOG

FRANKLIN CONTROL SYSTEMS

# DRIVES & CONTROLS

franklinwater.com

Franklin Electric

## SAFETY FIRST!

As with all electrical equipment, only qualified, expert personnel should perform maintenance and installation. Comply with all applicable local and national codes and laws that regulate the installation and operation of equipment and read manuals thoroughly. Use only installation manuals and not this sales brochure for installation procedures. It is up to the installer to determine product suitability for a given application.

*© 2014 Franklin Control Systems, Inc. Product improvement is a continual process. Pricing and specifications subject to change without notice. Marketing materials should not be relied upon for technical specification. Cerus, Mira, Orion, Titan, Franklin Control Systems and associated logos are trademarks of Franklin Control Systems, Inc. All sales subject to Franklin Terms and Conditions.*

# LARGE DRIVES & CONTROLS


**MOTOR SIZING CHART ..... 2**
Submersible Motors ..... 2
Surface Motors ..... 6
**SUBMONITOR CONNECT ..... 8**
Ordering & Sizing Information ..... 9
Specifications ..... 10
**SMS SUBMONITOR CONNECT STARTER ..... 11**
Ordering & Sizing Information ..... 12
Dimensions ..... 13
Specifications ..... 14
**IPS-RV INTELLIGENT PUMP SOFT STARTER ..... 15**
Ordering & Sizing Information ..... 17
Dimensions & Wiring Diagram ..... 19
Specifications ..... 20
**SSP SMARTSTART™ PUMP STARTER ..... 21**
Ordering & Sizing Information ..... 22
Dimensions ..... 23
Wiring Diagram & Specifications ..... 24
**SPS STANDARD PUMP STARTER ..... 25**
Ordering & Sizing Information ..... 26
Dimensions ..... 27
Wiring Diagram & Specifications ..... 28
**SPS-RV STANDARD PUMP STARTER REDUCED VOLTAGE ..... 29**
Ordering & Sizing Information ..... 30
Dimensions & Wiring Diagram ..... 31
Specifications ..... 32
**STARTER COMPARISON CHART ..... 33**
**P-SERIES VFD ..... 35**
**P-SERIES VFD ENCLOSED ..... 37**
Ordering & Sizing Information ..... 39
Dimensions ..... 44
**P-SERIES VFD STAND ALONE ..... 45**
Ordering & Sizing Information ..... 45
Dimensions ..... 47
Wiring Diagram ..... 48
Specifications ..... 49
Accessories ..... 50
Description Key ..... 54
**VDP VARIABLE DUPLEX PUMP PACKAGE ..... 55**
Ordering & Sizing Information ..... 56


For the most up-to-date product information, visit **franklinwater.com**.

MENU

# MOTOR SIZING CHART - SUBMERSIBLE MOTORS

## 4" 1-PHASE INPUT / 3-PHASE OUTPUT

| Motor | | | | P-Series VFD Submersible |
|---|---|---|---|---|
| Model Prefix | HP | SFA (Max Amps) | Volts | Part No. |
| 234306 | 3 | 12.5 | 208 | CIE3R-SUBP005-P2-1 |
| 234307 | 5 | 20.5 | | CIE3R-SUBP007-P2-1 |
| 234308 | 7.5 | 30.5 | | CIE3R-SUBP010-P2-1 |
| 234316 | 3 | 10.9 | 230 | CIE3R-SUBP003-P2-1 |
| 234317 | 5 | 17.8 | | CIE3R-SUBP005-P2-1 |
| 234318 | 7.5 | 26.4 | | CIE3R-SUBP007-P2-1 |
| 234326 | 3 | 5.5 | 460 | CIE3R-SUBP003-P4-1 |
| 234327 | 5 | 8.9 | | CIE3R-SUBP005-P4-1 |
| 234328 | 7.5 | 13.2 | | CIE3R-SUBP007-P4-1 |
| 234595 | 10 | 17.3 | | CIE3R-SUBP010-P4-1 |
| 234336 | 3 | 4.4 | 575 | CIE3R-SUBP003-P6-1 |
| 234337 | 5 | 7.1 | | CIE3R-SUBP005-P6-1 |
| 234338 | 7.5 | 10.6 | | CIE3R-SUBP007-P6-1 |
| 234598 | 10 | 13.6 | | CIE3R-SUBP010-P6-1 |

## 4" 3-PHASE INPUT / 3-PHASE OUTPUT

| Motor | | | | SubMonitor Connect Starter (SMS) | Intelligent Pump Soft Starter (IPS-RV) | SMARTSTART™ Pump Starter (SSP) | Standard Pump Starter (SPS) | Standard Pump Starter Reduced Voltage (SPS-RV) | P-Series VFD Submersible |
|---|---|---|---|---|---|---|---|---|---|
| Model Prefix | HP | SFA (Max amps) | Volts | Part No. | | | | | |
| 234306 | 3 | 12.5 | 208 | SMS3R-S1-M-G30 | IPS3R-RV-S1-J-G30 | SSP3R-S0P-J-G30 | SPS3R-S1-K-G20-13 | SPS3R-RV-S1-J-G30 | CIE3R-SUBP003-P2-3 |
| 234307 | 5 | 20.5 | | SMS3R-S1-M-G40 | IPS3R-RV-S1-J-G40 | SSP3R-S1-J-G40 | SPS3R-S1-K-G40-22 | SPS3R-RV-S1-J-G40 | CIE3R-SUBP005-P2-3 |
| 234308 | 7.5 | 30.5 | | SMS3R-S1P-M-G60 | IPS3R-RV-S1P-J-G60 | SSP3R-S1P-J-G60 | SPS3R-S2-K-G60-36 | SPS3R-RV-S1P-J-G60 | CIE3R-SUBP010-P2-3 |
| 234316 | 3 | 10.9 | 230 | SMS3R-S1-M-G20 | IPS3R-RV-S1-J-G20 | SSP3R-S0-J-G20 | SPS3R-S1-K-G20-13 | SPS3R-RV-S1-J-G15 | CIE3R-SUBP003-P2-3 |
| 234317 | 5 | 17.8 | | SMS3R-S1-M-G40 | IPS3R-RV-S1-J-G30 | SSP3R-S1-J-G40 | SPS3R-S1-K-G40-22 | SPS3R-RV-S1-J-G40 | CIE3R-SUBP005-P2-3 |
| 234318 | 7.5 | 26.4 | | SMS3R-S1P-M-G50 | IPS3R-RV-S1P-J-G50 | SSP3R-S1P-J-G50 | SPS3R-S1-K-G50-32 | SPS3R-RV-S1P-J-G50 | CIE3R-SUBP007-P2-3 |
| 234326 | 3 | 5.5 | 460 | SMS3R-S1-M-G15 | IPS3R-RV-S1-J-G15 | SSP3R-S0-J-G15 | SPS3R-S1-K-G15-6 | SPS3R-RV-S1-J-G15 | CIE3R-SUBP003-P4-3 |
| 234327 | 5 | 8.9 | | SMS3R-S1-M-G20 | IPS3R-RV-S1-J-G20 | SSP3R-S0-J-G20 | SPS3R-S1-K-G15-9 | SPS3R-RV-S1-J-G20 | CIE3R-SUBP005-P4-3 |
| 234328 | 7.5 | 13.2 | | SMS3R-S1-M-G30 | IPS3R-RV-S1-J-G30 | SSP3R-S0P-J-G30 | SPS3R-S1-K-G30-18 | SPS3R-RV-S1-J-G30 | CIE3R-SUBP007-P4-3 |
| 234598 | 10 | 17.3 | | SMS3R-S1-M-G40 | IPS3R-RV-S1-J-G30 | SSP3R-S1-J-G40 | SPS3R-S1-K-G40-22 | SPS3R-RV-S1-J-G40 | CIE3R-SUBP010-P4-3 |
| 234336 | 3 | 4.4 | 575 | SMS3R-S1-M-G15 | IPS3R-RV-S1-6J-G15 | SSP3R-S0-J-G15 | SPS3R-S1-6K-G15-6 | SPS3R-RV-S1-J-G15 | CIE3R-SUBP003-P6-3 |
| 234337 | 5 | 7.1 | | SMS3R-S1-M-G15 | IPS3R-RV-S1-6J-G15 | SSP3R-S0-J-G15 | SPS3R-S1-6K-G15-8 | SPS3R-RV-S1-J-G15 | CIE3R-SUBP005-P6-3 |
| 234338 | 7.5 | 10.6 | | SMS3R-S1-M-G20 | IPS3R-RV-S1-6J-G20 | SSP3R-S0-J-G20 | SPS3R-S1-6K-G20-13 | SPS3R-RV-S1-J-G20 | CIE3R-SUBP007-P6-3 |
| 234598 | 10 | 13.6 | | SMS3R-S1-M-G30 | IPS3R-RV-S1-6J-G30 | SSP3R-S0P-J-G30 | SPS3R-S1-6K-G30-18 | SPS3R-RV-S1-J-G30 | CIE3R-SUBP010-P6-3 |

FRANKLIN CONTROL SYSTEMS

# MOTOR SIZING CHART - SUBMERSIBLE MOTORS

## 6" 1-PHASE INPUT / 3-PHASE OUTPUT

| Motor | | | | P-Series VFD Submersible |
|---|---|---|---|---|
| Model Prefix | HP | SFA (Max Amps) | Volts | Part No. |
| 236650 | 5 | 20 | 208 | CIE3R-SUBP007-P2-1 |
| 236651 | 7.5 | 28.3 | | CIE3R-SUBP010-P2-1 |
| 236652 | 10 | 37 | | CIE3R-SUBP015-P2-1 |
| 236653 | 15 | 54.4 | | CIE3R-SUBP020-P2-1 |
| 236600 | 5 | 17.6 | 230 | CIE3R-SUBP005-P2-1 |
| 236601 | 7.5 | 24.6 | | CIE3R-SUBP007-P2-1 |
| 236602 | 10 | 32.4 | | CIE3R-SUBP010-P2-1 |
| 236603 | 15 | 47.4 | | CIE3R-SUBP015-P2-1 |
| 236604 | 20 | 60.6 | | CIE3R-SUBP020-P2-1 |
| 236610 | 5 | 8.8 | 460 | CIE3R-SUBP005-P4-1 |
| 236611 | 7.5 | 12.3 | | CIE3R-SUBP007-P4-1 |
| 236612 | 10 | 16.1 | | CIE3R-SUBP010-P4-1 |
| 236613 | 15 | 23.7 | | CIE3R-SUBP015-P4-1 |
| 236614 | 20 | 30.3 | | CIE3R-SUBP020-P4-1 |
| 236615 | 25 | 37.5 | | CIE3R-SUBP025-P4-1 |
| 236616 | 30 | 45.2 | | CIE3R-SUBP030-P4-1 |
| 236617 | 40 | 61.6 | | CIE3R-SUBP040-P4-1 |
| 276618 | 50 | 78.1 | | CIE3R-SUBP050-P4-1 |
| 276619 | 60 | 92.3 | | CIE3R-SUBP060-P4-1 |
| 236620 | 5 | 7.1 | 575 | CIE3R-SUBP005-P6-1 |
| 236621 | 7.5 | 9.8 | | CIE3R-SUBP007-P6-1 |
| 236622 | 10 | 12.9 | | CIE3R-SUBP010-P6-1 |
| 236623 | 15 | 19 | | CIE3R-SUBP015-P6-1 |
| 236624 | 20 | 24.2 | | CIE3R-SUBP020-P6-1 |
| 236625 | 25 | 30 | | CIE3R-SUBP025-P6-1 |
| 236626 | 30 | 36.2 | | CIE3R-SUBP030-P6-1 |
| 236627 | 40 | 49.6 | | CIE3R-SUBP040-P6-1 |
| 236628 | 50 | 62.5 | | CIE3R-SUBP050-P6-1 |
| 236629 | 60 | 73.9 | | CIE3R-SUBP060-P6-1 |

# MOTOR SIZING CHART - SUBMERSIBLE MOTORS

## 6" 3-PHASE INPUT / 3-PHASE OUTPUT

| Motor | | | | SubMonitor Connect Pump Starter (SMS) | Intelligent Pump Starter Reduced Voltage (IPS-RV) | SMARTSTART™ Pump Starter (SSP) | Standard Pump Starter (SPS) | Standard Pump Starter Reduced Voltage (SPS-RV) | P-Series VFD Submersible |
|---|---|---|---|---|---|---|---|---|---|
| Model Prefix | HP | SFA (Max amps) | Volts | Part No. | | | | | |
| 236650 | 5 | 20 | 208 | SMS3R-S1-M-G40 | IPS3R-RV-S1-J-G40 | SSP3R-S1-J-G40 | SPS3R-S1-K-G40-22 | SPS3R-RV-S1-J-G40 | CIE3R-SUBP005-P2-3 |
| 236651 | 7.5 | 28.3 | | SMS3R-S1P-M-G60 | IPS3R-RV-S1P-J-G60 | SSP3R-S1P-J-G60 | SPS3R-S2-K-G60-36 | SPS3R-RV-S1-J-G60 | CIE3R-SUBP007-P2-3 |
| 236652 | 10 | 37 | | SMS3R-S2-M-G80 | IPS3R-RV-S1P-J-G60 | SSP3R-S2-J-G80 | SPS3R-S2-K-G80-50 | SPS3R-RV-S2-J-G80 | CIE3R-SUBP010-P2-3 |
| 236653 | 15 | 54.4 | | SMS3R-S3-M-G100 | IPS3R-RV-S3-J-G125 | SSP3R-S3-J-G125 | SPS3R-S3-K-G100-65 | SPS3R-RV-S3-J-G100 | CIE3R-SUBP020-P2-3 |
| 236654 | 20 | 69.7 | | SMS3R-S3-M-G125 | IPS3R-RV-S3-J-G125 | SSP3R-S3-J-G125 | SPS3R-S3-K-G150-85 | SPS3R-RV-S3-J-G125 | CIE3R-SUBP025-P2-3 |
| 236655 | 25 | 86.3 | | SMS3R-S3P-M-G200 | IPS3R-RV-S3P-J-G200 | SSP3R-S3P-J-G200 | SPS3R-S3P-K-G200-100 | - | CIE3R-SUBP030-P2-3 |
| 236656 | 30 | 104 | | SMS3R-S4-M-G200 | IPS3R-RV-S4-J-G200 | SSP3R-S4-J-G200 | - | - | - |
| 236600 | 5 | 17.6 | 230 | SMS3R-S1-M-G40 | IPS3R-RV-S1-J-G40 | SSP3R-S1-J-G40 | SPS3R-S1-K-G40-22 | SPS3R-RV-S1-J-G40 | CIE3R-SUBP005-P2-3 |
| 236601 | 7.5 | 24.6 | | SMS3R-S1P-M-G50 | IPS3R-RV-S1P-J-G50 | SSP3R-S1P-J-G50 | SPS3R-S2-K-G50-36 | SPS3R-RV-S1P-J-G50 | CIE3R-SUBP007-P2-3 |
| 236602 | 10 | 32.4 | | SMS3R-S1P-M-G60 | IPS3R-RV-S1P-J-G60 | SSP3R-S2-J-G80 | SPS3R-S2-K-G60-36 | SPS3R-RV-S1P-J-G60 | CIE3R-SUBP010-P2-3 |
| 236603 | 15 | 47.4 | | SMS3R-S3-M-G100 | IPS3R-RV-S3-J-G100 | SSP3R-S2-J-G100 | SPS3R-S3-K-G100-65 | SPS3R-RV-S3-J-G100 | CIE3R-SUBP015-P2-3 |
| 236604 | 20 | 60.6 | | SMS3R-S3-M-G125 | IPS3R-RV-S3-J-G125 | SSP3R-S3-J-G125 | SPS3R-S3-K-G125-75 | SPS3R-RV-S3-J-G125 | CIE3R-SUBP020-P2-3 |
| 236605 | 25 | 75 | | SMS3R-S3P-M-G150 | IPS3R-RV-S3P-J-G150 | SSP3R-S3P-J-G150 | SPS3R-S3-K-G150-85 | SPS3R-RV-S3-J-G150 | CIE3R-SUBP025-P2-3 |
| 236656 | 30 | 90.4 | | SMS3R-S4-M-G200 | IPS3R-RV-S4-J-G200 | SSP3R-S3P-J-G200 | SPS3R-S3P-K-G200-100 | - | CIE3R-SUBP030-P2-3 |
| 236610 | 5 | 8.8 | 460 | SMS3R-S1-M-G20 | IPS3R-RV-S1-J-G20 | SSP3R-S0-J-G20 | SPS3R-S1-K-G15-9 | SPS3R-RV-S1-J-G20 | CIE3R-SUBP005-P4-3 |
| 236611 | 7.5 | 12.3 | | SMS3R-S1-M-G30 | IPS3R-RV-S1-J-G30 | SSP3R-S0P-J-G30 | SPS3R-S1-K-G30-18 | SPS3R-RV-S1-J-G30 | CIE3R-SUBP007-P4-3 |
| 236612 | 10 | 16.1 | | SMS3R-S1-M-G30 | IPS3R-RV-S1-J-G30 | SSP3R-S0P-J-G30 | SPS3R-S1-K-G30-18 | SPS3R-RV-S1-J-G30 | CIE3R-SUBP010-P4-3 |
| 236613 | 15 | 23.7 | | SMS3R-S1P-M-G50 | IPS3R-RV-S1P-J-G50 | SSP3R-S1P-J-G50 | SPS3R-S1-K-G50-32 | SPS3R-RV-S1P-J-G50 | CIE3R-SUBP015-P4-3 |
| 236614 | 20 | 30.3 | | SMS3R-S1P-M-G60 | IPS3R-RV-S1P-J-G60 | SSP3R-S1P-J-G60 | SPS3R-S2-K-G60-36 | SPS3R-RV-S1P-J-G60 | CIE3R-SUBP020-P4-3 |
| 236615 | 25 | 38.2 | | SMS3R-S2-M-G80 | IPS3R-RV-S2-J-G80 | SSP3R-S2-J-G80 | SPS3R-S2-K-G80-50 | SPS3R-RV-S2-J-G80 | CIE3R-SUBP025-P4-3 |
| 236616 | 30 | 45.2 | | SMS3R-S3-M-G100 | IPS3R-RV-S2-J-G80 | SSP3R-S2-J-G100 | SPS3R-S2-K-G80-50 | SPS3R-RV-S2-J-G100 | CIE3R-SUBP030-P4-3 |
| 236617 | 40 | 61.6 | | SMS3R-S3-M-G125 | IPS3R-RV-S3-J-G125 | SSP3R-S3-J-G125 | SPS3R-S3-K-G125-75 | SPS3R-RV-S3-J-G125 | CIE3R-SUBP040-P4-3 |
| 236618 | 50 | 78.1 | | SMS3R-S3P-M-G150 | IPS3R-RV-S3P-J-G150 | SSP3R-S3P-J-G150 | SPS3R-S3-K-G150-85 | - | CIE3R-SUBP050-P4-3 |
| 236619 | 60 | 92.3 | | SMS3R-S4-M-G200 | IPS3R-RV-S4-J-G200 | SSP3R-S3P-J-G200 | SPS3R-S3P-K-G200-100 | - | CIE3R-SUBP060-P4-3 |
| 236610 | 5 | 7.1 | 575 | SMS3R-S1-M-G15 | IPS3R-RV-S1-6J-G15 | SSP3R-S0-J-G15 | SPS3R-S1-6K-G15-8 | SPS3R-RV-S1-J-G15 | CIE3R-SUBP005-P6-3 |
| 236611 | 7.5 | 9.8 | | SMS3R-S1-M-G20 | IPS3R-RV-S1-6J-G20 | SSP3R-S0-J-G20 | SPS3R-S1-6K-G20-13 | SPS3R-RV-S1-J-G20 | CIE3R-SUBP007-P6-3 |
| 236612 | 10 | 12.9 | | SMS3R-S1-M-G30 | IPS3R-RV-S1-6J-G30 | SSP3R-S0P-J-G30 | SPS3R-S1-6K-G30-18 | SPS3R-RV-S1-J-G30 | CIE3R-SUBP010-P6-3 |
| 236613 | 15 | 19 | | SMS3R-S1-M-G40 | IPS3R-RV-S1-6J-G40 | SSP3R-S1-J-G40 | SPS3R-S1-6K-G40-25 | SPS3R-RV-S1-J-G40 | CIE3R-SUBP015-P6-3 |
| 236614 | 20 | 24.2 | | SMS3R-S1-M-G50 | IPS3R-RV-S1P-6J-G50 | SSP3R-S1P-J-G50 | SPS3R-S1-6K-G50-32 | SPS3R-RV-S1P-J-G50 | CIE3R-SUBP020-P6-3 |
| 236615 | 25 | 30 | | SMS3R-S2-M-G60 | IPS3R-RV-S1P-6J-G60 | SSP3R-S1P-J-G60 | SPS3R-S2-6K-G60-36 | SPS3R-RV-S1P-J-G60 | CIE3R-SUBP025-P6-3 |
| 236616 | 30 | 36.2 | | SMS3R-S2-M-G80 | IPS3R-RV-S2-6J-G80 | SSP3R-S2-J-G80 | SPS3R-S2-6K-G80-50 | SPS3R-RV-S2-J-G80 | CIE3R-SUBP030-P6-3 |
| 236617 | 40 | 49.6 | | SMS3R-S3-M-G100 | IPS3R-RV-S3-6J-G100 | SSP3R-S2-J-G100 | SPS3R-S3-6K-G100-65 | SPS3R-RV-S3-J-G100 | CIE3R-SUBP040-P6-3 |
| 236618 | 50 | 62.5 | | SMS3R-S3-M-G125 | IPS3R-RV-S3-6J-G125 | SSP3R-S3P-J-G150 | SPS3R-S3-6K-G125-75 | SPS3R-RV-S3-J-G125 | CIE3R-SUBP050-P6-3 |
| 236619 | 60 | 73.9 | | SMS3R-S3-M-G150 | IPS3R-RV-S3-6J-G150 | SSP3R-S3P-J-G150 | SPS3R-S3-6K-G150-85 | SPS3R-RV-S3P-J-G150 | CIE3R-SUBP060-P6-3 |

FRANKLIN CONTROL SYSTEMS

# MOTOR SIZING CHART - SUBMERSIBLE MOTORS

## 8" 1-PHASE INPUT / 3-PHASE OUTPUT

| Motor | | | | P-Series VFD Submersible |
|---|---|---|---|---|
| Model Prefix | HP | SFA (Max Amps) | Volts | Part No. |
| 239600 | 40 | 60 | 460 | CIE3R-SUBP040-P4-1 |
| 239601 | 50 | 73 | | CIE3R-SUBP050-P4-1 |
| 239602 | 60 | 86 | | CIE3R-SUBP060-P4-1 |
| 239603 | 75 | 107 | | CIE3R-SUBP075-P4-1 |
| 239604 | 100 | 142 | | CIE3R-SUBP100-P4-1 |
| 239105 | 125 | 188 | | CIE3R-SUBP125-P4-1 |
| 239106 | 150 | 219 | | CIE3R-SUBP150-P4-1 |
| 239107 | 175 | 249 | | CIE3R-SUBP200-P4-1 |
| 239108 | 200 | 282 | | CIE3R-SUBP200-P4-1 |
| 239610 | 40 | 48 | 575 | CIE3R-SUBP040-P6-1 |
| 239611 | 50 | 59 | | CIE3R-SUBP050-P6-1 |
| 239612 | 60 | 69 | | CIE3R-SUBP060-P6-1 |
| 239613 | 75 | 86 | | CIE3R-SUBP075-P6-1 |
| 239614 | 100 | 114 | | - |
| 239115 | 125 | 151 | | - |
| 239116 | 150 | 182 | | - |
| 239117 | 175 | 200 | | - |
| 239118 | 200 | 226 | | - |

## 8" 3-PHASE INPUT / 3-PHASE OUTPUT

| Motor | | | | SubMonitor Connect Pump Starter (SMS) | Intelligent Pump Starter Reduced Voltage (IPS-RV) | SMARTSTART™ Pump Starter (SSP) | Standard Pump Starter (SPS) | Standard Pump Starter Reduced Voltage (SPS-RV) | P-Series VFD Submersible |
|---|---|---|---|---|---|---|---|---|---|
| Model Prefix | HP | SFA (Max amps) | Volts | Part No. | | | | | |
| 239600 | 40 | 60 | 460 | SMS3R-S3-M-G125 | IPS3R-RV-S3-J-G125 | SSP3R-S3-J-G125 | SPS3R-S3-K-G125-75 | SPS3R-RV-S3-J-G125 | CIE3R-SUBP040-P4-3 |
| 239601 | 50 | 73 | | SMS3R-S3P-M-G150 | IPS3R-RV-S3P-J-G150 | SSP3R-S3P-J-G150 | SPS3R-S3-K-G150-85 | SPS3R-RV-S3P-J-G150 | CIE3R-SUBP050-P4-3 |
| 239602 | 60 | 86 | | SMS3R-S4-M-G200 | IPS3R-RV-S4-J-G200 | SSP3R-S3P-J-G200 | SPS3R-S3P-K-G200-100 | - | CIE3R-SUBP060-P4-3 |
| 239603 | 75 | 107 | | SMS3R-S4-M-G200 | IPS3R-RV-S4-J-G200 | - | - | - | CIE3R-SUBP075-P4-3 |
| 239604 | 100 | 142 | | SMS3R-S5-M-G300 | IPS3R-RV-S5-J-G300 | - | - | - | CIE3R-SUBP100-P4-3 |
| 239105 | 125 | 188 | | SMS3R-S5-M-G400 | IPS3R-RV-S5-J-G400 | - | - | - | CIE3R-SUBP125-P4-3 |
| 239106 | 150 | 219 | | SMS3R-S5-M-G400 | IPS3R-RV-S5-J-G400 | - | - | - | CIE3R-SUBP150-P4-3 |
| 239107 | 175 | 249 | | SMS3R-S5-M-G500 | IPS3R-RV-S5-J-G500 | - | - | - | CIE3R-SUBP200-P4-3 |
| 239108 | 200 | 282 | | SMS3R-S5-M-G500 | IPS3R-RV-S5-J-G500 | - | - | - | CIE3R-SUBP200-P4-3 |
| 239610 | 40 | 48 | 575 | SMS3R-S3-M-G100 | IPS3R-RV-S3-6J-G100 | SSP3R-S2-J-G80 | SPS3R-S3-6K-G100-65 | SPS3R-RV-S3-J-G100 | CIE3R-SUBP040-P6-3 |
| 239611 | 50 | 59 | | SMS3R-S3-M-G125 | IPS3R-RV-S3-6J-G125 | SSP3R-S2-J-G100 | SPS3R-S3-6K-G125-75 | SPS3R-RV-S3-J-G125 | CIE3R-SUBP050-P6-3 |
| 239612 | 60 | 69 | | SMS3R-S3-M-G150 | IPS3R-RV-S3-6J-G150 | SSP3R-S3-J-G125 | SPS3R-S3-6K-G125-75 | SPS3R-RV-S3-J-G125 | CIE3R-SUBP060-P6-3 |
| 239613 | 75 | 86 | | SMS3R-S4-6M-G200 | IPS3R-RV-S5-6J-G200 | - | - | - | CIE3R-SUBP075-P6-3 |
| 239614 | 100 | 114 | | SMS3R-S4-6M-G200 | IPS3R-RV-S5-6J-G200 | - | - | - | CIE3R-SUBP100-P6-3 |
| 239115 | 125 | 151 | | SMS3R-S5-6M-G300 | IPS3R-RV-S5-6J-G300 | - | - | - | CIE3R-SUBP125-P6-3 |
| 239116 | 150 | 182 | | SMS3R-S5-6M-G400 | IPS3R-RV-S5-6J-G400 | - | - | - | - |
| 239117 | 175 | 200 | | SMS3R-S5-6M-G400 | IPS3R-RV-S5-6J-G400 | - | - | - | - |
| 239118 | 200 | 226 | | SMS3R-S5P-6M-G500 | IPS3R-RV-S5-6J-G500 | - | - | - | - |

# MOTOR SIZING CHART - SURFACE MOTORS

## 1-PHASE INPUT / 3-PHASE OUTPUT

| Motor | | | P-Series VFD Centrifugal |
|---|---|---|---|
| HP | FLA | Volts | Part No. |
| 3 | 11 | 208 | CIE3R-CENP003-P2-1 |
| 5 | 17.5 | | CIE3R-CENP007-P2-1 |
| 7.5 | 25 | | CIE3R-CENP010-P2-1 |
| 10 | 32 | | CIE3R-CENP015-P2-1 |
| 15 | 48 | | CIE3R-CENP020-P2-1 |
| 20 | 62 | | CIE3R-CENP020-P2-1 |
| 3 | 9.6 | 230 | CIE3R-CENP003-P2-1 |
| 5 | 15.2 | | CIE3R-CENP005-P2-1 |
| 7.5 | 22 | | CIE3R-CENP007-P2-1 |
| 10 | 28 | | CIE3R-CENP010-P2-1 |
| 15 | 42 | | CIE3R-CENP015-P2-1 |
| 20 | 54 | | CIE3R-CENP020-P2-1 |
| 3 | 4.8 | 460 | CIE3R-CENP003-P4-1 |
| 5 | 7.6 | | CIE3R-CENP005-P4-1 |
| 7.5 | 11 | | CIE3R-CENP007-P4-1 |
| 10 | 14 | | CIE3R-CENP010-P4-1 |
| 15 | 21 | | CIE3R-CENP015-P4-1 |
| 20 | 27 | | CIE3R-CENP020-P4-1 |
| 25 | 34 | | CIE3R-CENP025-P4-1 |
| 30 | 40 | | CIE3R-CENP030-P4-1 |
| 40 | 52 | | CIE3R-CENP040-P4-1 |
| 50 | 65 | | CIE3R-CENP050-P4-1 |
| 60 | 77 | | CIE3R-CENP060-P4-1 |
| 75 | 96 | | CIE3R-CENP075-P4-1 |
| 100 | 124 | | CIE3R-CENP100-P4-1 |
| 125 | 156 | | CIE3R-CENP125-P4-1 |
| 150 | 180 | | CIE3R-CENP150-P4-1 |
| 200 | 240 | | CIE3R-CENP200-P4-1 |
| 3 | 3.9 | 575 | CIE3R-CENP003-P6-1 |
| 5 | 6.1 | | CIE3R-CENP005-P6-1 |
| 7.5 | 9 | | CIE3R-CENP007-P6-1 |
| 10 | 11 | | CIE3R-CENP010-P6-1 |
| 15 | 17 | | CIE3R-CENP015-P6-1 |
| 20 | 22 | | CIE3R-CENP020-P6-1 |
| 25 | 27 | | CIE3R-CENP025-P6-1 |
| 30 | 32 | | CIE3R-CENP030-P6-1 |
| 40 | 41 | | CIE3R-CENP040-P6-1 |
| 50 | 52 | | CIE3R-CENP050-P6-1 |
| 60 | 62 | | CIE3R-CENP060-P6-1 |
| 75 | 77 | | CIE3R-CENP075-P6-1 |

FRANKLIN CONTROL SYSTEMS

# MOTOR SIZING CHART - SURFACE MOTORS

## 3-PHASE INPUT / 3-PHASE OUTPUT

| Motor | | | SubMonitor Connect Starter (SMS) | Intelligent Pump Starter Reduced Voltage (IPS-RV) | SMARTSTART™ Pump Starter (SSP) | Standard Pump Starter (SPS) | Standard Pump Starter Reduced Voltage (SPS-RV) | P-Series VFD Centrifugal |
|---|---|---|---|---|---|---|---|---|
| HP | FLA | Volts | Part No. | | | | | |
| 3 | 11 | 208 | SMS3R-S1-M-G20 | IPS3R-RV-S1-J-G20 | SSP3R-S0-J-G20 | SPS3R-S1-K-G20-13 | SPS3R-RV-S1-J-G20 | CIE3R-CENP003-P2-3 |
| 5 | 17.5 | | SMS3R-S1-M-G40 | IPS3R-RV-S1-J-G40 | SSP3R-S1-J-G40 | SPS3R-S1-K-G40-22 | SPS3R-RV-S1-J-G40 | CIE3R-CENP005-P2-3 |
| 7.5 | 25 | | SMS3R-S1P-M-G50 | IPS3R-RV-S1P-J-G50 | SSP3R-S1P-J-G50 | SPS3R-S1-K-G50-32 | SPS3R-RV-S1P-J-G50 | CIE3R-CENP007-P2-3 |
| 10 | 32 | | SMS3R-S1P-M-G60 | IPS3R-RV-S1P-J-G60 | SSP3R-S1P-J-G60 | SPS3R-S2-K-G60-36 | SPS3R-RV-S1P-J-G60 | CIE3R-CENP010-P2-3 |
| 15 | 48 | | SMS3R-S3-M-G100 | IPS3R-RV-S3-J-G100 | SSP3R-S2-J-G100 | SPS3R-S3-K-G100-65 | SPS3R-RV-S3-J-G100 | CIE3R-CENP015-P2-3 |
| 20 | 62 | | SMS3R-S3-M-G125 | IPS3R-RV-S3-J-G125 | SSP3R-S3-J-G125 | SPS3R-S3-K-G125-75 | SPS3R-RV-S3-J-G125 | CIE3R-CENP020-P2-3 |
| 25 | 78 | | SMS3R-S3P-M-G150 | IPS3R-RV-S3P-J-G150 | SSP3R-S3P-J-G150 | SPS3R-S3-K-G150-85 | SPS3R-RV-S3P-J-G150 | CIE3R-CENP025-P2-3 |
| 30 | 92 | | SMS3R-S3P-M-G200 | IPS3R-RV-S4-J-G200 | SSP3R-S3P-J-G200 | SPS3R-S3P-K-G200-100 | - | CIE3R-CENP030-P2-3 |
| 40 | 120 | | SMS3R-S4-M-G250 | IPS3R-RV-S4-J-G250 | SSP3R-S4-J-G250 | - | - | - |
| 50 | 150 | | SMS3R-S5-M-G300 | IPS3R-RV-S5-J-G300 | - | - | - | - |
| 3 | 9.6 | 230 | SMS3R-S1-M-G20 | IPS3R-RV-S1-J-G20 | SSP3R-S0-J-G20 | SPS3R-S1-K-G20-13 | SPS3R-RV-S1-J-G20 | CIE3R-CENP003-P2-3 |
| 5 | 15.2 | | SMS3R-S1-M-G30 | IPS3R-RV-S1-J-G30 | SSP3R-S0P-J-G30 | SPS3R-S1-K-G30-18 | SPS3R-RV-S1-J-G30 | CIE3R-CENP005-P2-3 |
| 7.5 | 22 | | SMS3R-S1-M-G40 | IPS3R-RV-S1-J-G40 | SSP3R-S1-J-G40 | SPS3R-S1-K-G40-22 | SPS3R-RV-S1-J-G40 | CIE3R-CENP007-P2-3 |
| 10 | 28 | | SMS3R-S1P-M-G50 | IPS3R-RV-S1P-J-G50 | SSP3R-S1P-J-G50 | SPS3R-S2-K-G50-36 | SPS3R-RV-S1P-J-G50 | CIE3R-CENP010-P2-3 |
| 15 | 42 | | SMS3R-S2-M-G80 | IPS3R-RV-S2-J-G80 | SSP3R-S2-J-G80 | SPS3R-S2-K-G80-50 | SPS3R-RV-S2-J-G80 | CIE3R-CENP015-P2-3 |
| 20 | 54 | | SMS3R-S3-M-G100 | IPS3R-RV-S3-J-G100 | SSP3R-S3-J-G125 | SPS3R-S3-K-G100-65 | SPS3R-RV-S3-J-G100 | CIE3R-CENP020-P2-3 |
| 25 | 68 | | SMS3R-S3-M-G125 | IPS3R-RV-S3-J-G125 | SSP3R-S3-J-G125 | SPS3R-S3-K-G125-75 | SPS3R-RV-S3-J-G125 | CIE3R-CENP025-P2-3 |
| 30 | 80 | | SMS3R-S3P-M-G150 | IPS3R-RV-S3P-J-G150 | SSP3R-S3P-J-G150 | SPS3R-S3-K-G150-85 | SPS3R-RV-S3P-J-G150 | CIE3R-CENP030-P2-3 |
| 40 | 104 | | SMS3R-S4-M-G200 | IPS3R-RV-S4-J-G200 | SSP3R-S3P-J-G200 | | - | - |
| 50 | 130 | | SMS3R-S4-M-G250 | IPS3R-RV-S4-J-G250 | - | | - | - |
| 3 | 4.8 | 460 | SMS3R-S1-M-G15 | IPS3R-RV-S1-J-G15 | SSP3R-S0-J-G15 | SPS3R-S1-K-G15-6 | SPS3R-RV-S1-J-G15 | CIE3R-CENP003-P4-3 |
| 5 | 7.6 | | SMS3R-S1-M-G15 | IPS3R-RV-S1-J-G15 | SSP3R-S0-J-G15 | SPS3R-S1-K-G15-9 | SPS3R-RV-S1-J-G15 | CIE3R-CENP005-P4-3 |
| 7.5 | 11 | | SMS3R-S1-M-G20 | IPS3R-RV-S1-J-G20 | SSP3R-S0-J-G20 | SPS3R-S1-K-G20-13 | SPS3R-RV-S1-J-G20 | CIE3R-CENP007-P4-3 |
| 10 | 14 | | SMS3R-S1-M-G30 | IPS3R-RV-S1-J-G30 | SSP3R-S0P-J-G30 | SPS3R-S1-K-G30-18 | SPS3R-RV-S1-J-G30 | CIE3R-CENP010-P4-3 |
| 15 | 21 | | SMS3R-S1-M-G40 | IPS3R-RV-S1-J-G40 | SSP3R-S1-J-G40 | SPS3R-S1-K-G40-22 | SPS3R-RV-S1-J-G40 | CIE3R-CENP015-P4-3 |
| 20 | 27 | | SMS3R-S1P-M-G50 | IPS3R-RV-S1P-J-G50 | SSP3R-S1P-J-G50 | SPS3R-S1-K-G50-32 | SPS3R-RV-S1P-J-G50 | CIE3R-CENP020-P4-3 |
| 25 | 34 | | SMS3R-S1P-M-G60 | IPS3R-RV-S1P-J-G60 | SSP3R-S2-J-G80 | SPS3R-S2-K-G60-36 | SPS3R-RV-S1P-J-G60 | CIE3R-CENP025-P4-3 |
| 30 | 40 | | SMS3R-S2-M-G80 | IPS3R-RV-S2-J-G80 | SSP3R-S2-J-G80 | SPS3R-S2-K-G80-50 | SPS3R-RV-S2-J-G80 | CIE3R-CENP030-P4-3 |
| 40 | 52 | | SMS3R-S3-M-G100 | IPS3R-RV-S3-J-G100 | SSP3R-S2-J-G100 | SPS3R-S3-K-G100-65 | SPS3R-RV-S3-J-G100 | CIE3R-CENP040-P4-3 |
| 50 | 65 | | SMS3R-S3-M-G125 | IPS3R-RV-S3-J-G125 | SSP3R-S3-J-G125 | SPS3R-S3-K-G125-75 | SPS3R-RV-S3-J-G125 | CIE3R-CENP050-P4-3 |
| 60 | 77 | | SMS3R-S3P-M-G150 | IPS3R-RV-S3P-J-G150 | SSP3R-S3P-J-G150 | SPS3R-S3-K-G150-85 | SPS3R-RV-S3P-J-G150 | CIE3R-CENP060-P4-3 |
| 75 | 96 | | SMS3R-S4-M-G200 | IPS3R-RV-S4-J-G200 | SSP3R-S3P-J-G200 | SPS3R-S3P-K-G200-100 | - | CIE3R-CENP075-P4-3 |
| 100 | 124 | | SMS3R-S4-M-G250 | IPS3R-RV-S4-J-G250 | - | - | - | CIE3R-CENP100-P4-3 |
| 125 | 156 | | SMS3R-S5-M-G300 | IPS3R-RV-S5-J-G300 | - | - | - | CIE3R-CENP125-P4-3 |
| 150 | 180 | | SMS3R-S5-M-G400 | IPS3R-RV-S5-J-G400 | - | - | - | CIE3R-CENP150-P4-3 |
| 200 | 240 | | SMS3R-S5-M-G500 | IPS3R-RV-S5-J-G500 | - | - | - | CIE3R-CENP200-P4-3 |
| 250 | 302 | | SMS3R-S5P-M-G600 | IPS3R-RV-S5/J-G600 | - | - | - | CIE3R-CENP250-P4-3 |
| 300 | 361 | | SMS3R-S5P-M-G800 | - | - | - | - | CIE3R-CENP300-P4-3 |
| 350 | 414 | | - | - | - | - | - | CIE3R-CENP350-P4-3 |
| 400 | 477 | | - | - | - | - | - | CIE3R-CENP400-P4-3 |
| 3 | 3.9 | 575 | SMS3R-S1-M-G15 | IPS3R-RV-S1-6J-G15 | SSP3R-S0-J-G15 | SPS3R-S1-6K-G15-4 | SPS3R-RV-S1-J-G15 | CIE3R-CENP003-P6-3 |
| 5 | 6.1 | | SMS3R-S1-M-G15 | IPS3R-RV-S1-6J-G15 | SSP3R-S0-J-G15 | SPS3R-S1-6K-G15-8 | SPS3R-RV-S1-J-G15 | CIE3R-CENP005-P6-3 |
| 7.5 | 9 | | SMS3R-S1-M-G20 | IPS3R-RV-S1-6J-G20 | SSP3R-S0-J-G20 | SPS3R-S1-6K-G20-13 | SPS3R-RV-S1-J-G20 | CIE3R-CENP007-P6-3 |
| 10 | 11 | | SMS3R-S1-M-G20 | IPS3R-RV-S1-6J-G20 | SSP3R-S0-J-G20 | SPS3R-S1-6K-G20-13 | SPS3R-RV-S1-J-G20 | CIE3R-CENP010-P6-3 |
| 15 | 17 | | SMS3R-S1-M-G30 | IPS3R-RV-S1-6J-G30 | SSP3R-S0P-J-G30 | SPS3R-S1-6K-G30-18 | SPS3R-RV-S1-J-G30 | CIE3R-CENP015-P6-3 |
| 20 | 22 | | SMS3R-S1-M-G40 | IPS3R-RV-S1-6J-G30 | SSP3R-S1-J-G40 | SPS3R-S1-6K-G40-25 | SPS3R-RV-S1-J-G40 | CIE3R-CENP020-P6-3 |
| 25 | 27 | | SMS3R-S1-M-G50 | IPS3R-RV-S1P-6J-G50 | SSP3R-S1P-J-G50 | SPS3R-S1-6K-G50-32 | SPS3R-RV-S1P-J-G50 | CIE3R-CENP025-P6-3 |
| 30 | 32 | | SMS3R-S2-M-G60 | IPS3R-RV-S1P-6J-G60 | SSP3R-S1P-J-G60 | SPS3R-S2-6K-G60-36 | SPS3R-RV-S1P-J-G60 | CIE3R-CENP030-P6-3 |
| 40 | 41 | | SMS3R-S2-M-G80 | IPS3R-RV-S2-6J-G80 | SSP3R-S2-J-G80 | SPS3R-S2-6K-G80-50 | SPS3R-RV-S2-J-G80 | CIE3R-CENP040-P6-3 |
| 50 | 52 | | SMS3R-S3-M-G100 | IPS3R-RV-S3-6J-G100 | SSP3R-S2-J-G100 | SPS3R-S3-6K-G100-65 | SPS3R-RV-S3-J-G100 | CIE3R-CENP050-P6-3 |
| 60 | 62 | | SMS3R-S3-M-G125 | IPS3R-RV-S3-6J-G125 | SSP3R-S3-J-G125 | SPS3R-S3-6K-G125-75 | SPS3R-RV-S3-J-G125 | CIE3R-CENP060-P6-3 |
| 75 | 77 | | SMS3R-S3-M-G150 | IPS3R-RV-S3-6J-G150 | SSP3R-S3-J-G150 | SPS3R-S3-6K-G150-85 | SPS3R-RV-S3P-J-G150 | CIE3R-CENP075-P6-3 |
| 100 | 99 | | SMS3R-S4-6M-G200 | IPS3R-RV-S5-6J-G200 | - | - | - | CIE3R-CENP100-P6-3 |
| 125 | 125 | | SMS3R-S4-6M-G250 | IPS3R-RV-S5-6J-G250 | - | - | - | CIE3R-CENP125-P6-3 |
| 150 | 144 | | SMS3R-S5-6M-G300 | IPS3R-RV-S5-6J-G300 | - | - | - | - |
| 200 | 192 | | SMS3R-S5-6M-G400 | IPS3R-RV-S5-6J-G400 | - | - | - | - |
| 250 | 242 | | SMS3R-S5-6M-G500 | IPS3R-RV-S5-6J-G500 | - | - | - | - |
| 300 | 289 | | SMS3R-S5-6M-G600 | IPS3R-RV-S5-6J-G600 | - | - | - | - |

# SUBMONITOR CONNECT

3Ø, 50/60 Hz, 200~600 VAC, 2~700 HP

## ELECTRONIC OVERLOAD MOTOR PROTECTION

- Wide range, adjustable, class 5-30 electronic overload
- Dry pump detection protects your pump and motor from adverse conditions and allows for time-based automatic restart with well recovery mode
- Industry-leading motor protection for the following conditions: over/under power (dry-run), over/under voltage protection, voltage phase loss, voltage and current phase unbalance, locked rotor, cycle fault, ground fault
- Easy access to input and output terminals
- 32-character, backlit, NEMA 4x, wash-down rated screen mounted on front of panel allowing for safe viewing of conditions while motor is running
- Motor insulation check

## REAL-TIME & DATE-STAMPED FAULT LOGGING

- Unit ships with a pre-programmed real time clock with a 10-year battery backup
- Contains separate fault, configuration change, and start logs. Independent logs allow user to see last fault even if it occurred years ago
- Fault log tracks 150 faults with date and time stamp accurate down to the second; allows users to diagnose power problems and prove them to your power provider; unit will give users a 'snapshot' of conditions at the time of fault, such as line to line voltage and current, alarms present, and I/O status; format of time stamping example: 7/7/16 10:15:24

## APPLICATION-BASED SETUP

- SubMonitor Connect is an advanced, comprehensive, 3 phase motor protection relay that allows users to dial in protection and automation with extreme accuracy and parameter depth. However, SubMonitor Connect also has a streamlined Basic Setup Wizard to allows user to get up and running quickly.
- 9 simple steps to program unit
- Users select between Submersible, Surface, or Custom and SubMonitor prepopulates protection parameters accordingly
- Confirm basic motor info, key protection info, time to get started.

# SUBMONITOR CONNECT - ORDERING & SIZING INFORMATION

## SUBMONITOR CONNECT

| Description | Part No. |
|---|---|
| SubMonitor Connect - Standard, 1-135A | 5860015010 |
| SubMonitor Connect - Premium, 1-135A | 5860005110 |

## OPTIONS

| Description | Part No. |
|---|---|
| SubMonitor Connect Remote Display Assembly | 5860015150 |
| Door Mounting Kit | 5860015160 |
| External CTs, 120-270A | 5860015170 |
| External CTs, 200-400A | 5860015180 |
| External CTs, 400-1000A | 5860015190 |

*NOTE: Product range is 0.1 to 1000A. External CTs required above 135A.*

# SUBMONITOR CONNECT - SPECIFICATIONS

## SPECIFICATIONS

| | | |
|---|---|---|
| **Starter Type** | | |
| Standard or combination (service rated, suitable for use as a service disconnect) | | |
| NEMA Type 3R Enclosed Outdoor Rated | | |
| **User Interface** | | |
| Settings Adjustments | | 32 character, backlit NEMA 4X display. |
| | | FE Connect Mobile App connected via Bluetooth |
| Hand/Off/Auto | | Door mounted 3-position switch |
| **Standard Control Operations** | | |
| Input | RS-485 | Modbus RTU slave |
| | PT100/1000 | On/Off, adjustable: 0-100 C, 212 F |
| Output | Fault Relay | Normally Open Relay Contact. 1Aa @ 240VAC |
| Operational | Overload Type | Electronic, Simulated $I^2T$ trip curve |
| | Power Fail Modes | Restart in last mode (Hand/Off/Auto) |
| | | Restart in off mode |
| | On/Off Time Delay | On/Off, adjustable: 1-60seconds |
| | Backspin Delay | On/Off, adjustable: 2 seconds - 60 minutes |
| | Fault Reset | Adjustable: manual or automatic (default differs per motor protection feature) |
| | Starts | 6/hour, 20 seconds max start time @ 400% FLA, 30 seconds max start time @ 300% FLA |
| **Enviromental** | | |
| Ambient Operating Temp | | -5 °F to 140 °F (-20 °C to 60 °C) |
| Ambient Storage Temp | | -5 °F to 185 °F (-20 °C to 85 °C) |
| Relative Humidity | | 5% to 95% non-condensing |

| Motor/Soft Starter Protection | Adjustment/Description | Default Setting |
|---|---|---|
| Overload Current Setting Range | Differs per model | Per SFA |
| Overload Trip Class | Adjustable: 5-30 | 10 |
| Overload Service Factor | Adjustable: 1.00-2.00 | 1.15 |
| Under Power (Dry Run) | On/Off/Alarm, adjustable: 1-99% of nominal | On / 65% |
| Over Power | On/Off/Alarm, adjustable: 101-200% of nominal | On / 125% |
| Under Voltage | On/Off/Alarm, adjustable: 80-99% of nominal | On / 90 % |
| Over Voltage | On/Off/Alarm, adjustable: 101-125% of nominal | On / 110 % |
| Voltage Phase Loss | Always on | On / Trips if below 60VAC |
| Ground Fault (UL 1053 Certified) | On/Off/Alarm, adjustable: 1-10 Amps | On / 1A |
| Cycle Fault | On/Off, Start Limit adjustable: 2-100 | On |
| Warm Start Provision | On/Off, delays motor restart based on calcualted motor temp | On |
| SMARTSTART™ Protection | Adjustment/Description | Default Setting |
| Current Phase Unbalance | On/Off, adjustable: 1-50% | On / 5% |
| Locked Rotor/Stall | On/Off, trips if current exceeds 300% max amps for 0.5s | On |
| Out of Calibration | On/Off, trips after 10 seconds if max amps setting is incorrect | Off |
| Max Time to Start | On/Off, regardless of max amps or $I^2T$ trip curve, always trip at start if starting current is outside of an acceptabke range and still decreasing after 10 seconds | Off |

FRANKLIN CONTROL SYSTEMS

# SMS SUBMONITOR CONNECT STARTER

3Ø, 50/60 Hz, 200~600 VAC, 2~300 HP

## ELECTRONIC OVERLOAD MOTOR PROTECTION

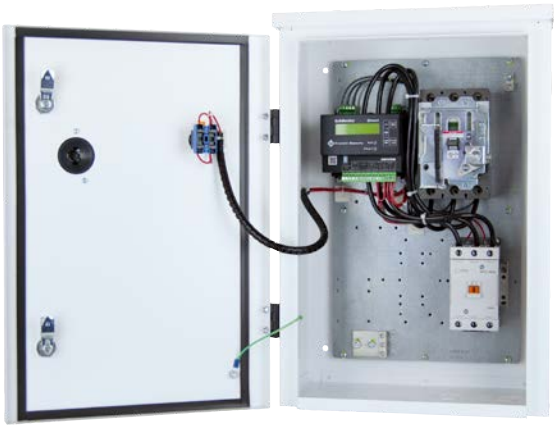

- Wide range, adjustable, class 5-30 electronic overload
- Dry pump detection protects your pump and motor from adverse conditions and allows for time-based automatic restart with well recovery mode
- Industry-leading motor protection for the following conditions: over/under power (dry-run), over/under voltage protection, voltage phase loss, voltage and current phase unbalance, locked rotor, cycle fault, ground fault
- Easy access to input and output terminals
- 32-character, backlit, NEMA 4x, wash-down rated screen mounted on front of panel allowing for safe viewing of conditions while motor is running
- Motor insulation check

## REAL-TIME & DATE-STAMPED FAULT LOGGING

- Unit ships with a pre-programmed real time clock with a 10-year battery backup
- Contains separate fault, configuration change, and start logs. Independent logs allow user to see last fault even if it occurred years ago
- Fault log tracks 150 faults with date and time stamp accurate down to the second; allows users to diagnose power problems and prove them to your power provider; unit will give users a 'snapshot' of conditions at the time of fault, such as line to line voltage and current, alarms present, and I/O status; format of time stamping example: 7/7/16 10:15:24

## APPLICATION-BASED SETUP

- SubMonitor Connect is an advanced, comprehensive, 3 phase motor protection relay that allows users to dial in protection and automation with extreme accuracy and parameter depth. However, SubMonitor Connect also has a streamlined Basic Setup Wizard to allows user to get up and running quickly.
- 9 simple steps to program unit
- Users select between Submersible, Surface, or Custom and SubMonitor prepopulates protection parameters accordingly
- Confirm basic motor info, key protection info, time to get started.

## AUTOMATION READY - ADVANCED PUMP CONTROL

- 12-240 VAC/VDC wet input for remote start/stop
- Dry contacts for auto run/shutdown or high float/low float
- Modbus RTA communication
- Automatic fault reset and on and off delay settings
- Well recovery mode

## HEAVY-DUTY INDUSTRIAL-GRADE CONSTRUCTION

- Hand-Off-Auto switch rated IP69K for dust tight, high pressure spray-down applications.
- Outdoor rated, gasketed, powder coated, NEMA 3R enclosure designed in house by FCS to optimize layout and functionality

## HEAVY-DUTY INDUSTRIAL-GRADE CONSTRUCTION

- UL 489 circuit breaker disconnect for branch and short circuit protection
- No fuses required saving time and money
- Lockable handle

# SMS SUBMONITOR CONNECT STARTER - ORDERING & SIZING INFORMATION

## SUBMONITOR CONNECT STARTER (COMBINATION)

| Model No. | 200 V - 460 V SFA Range** (A) | 3-Phase UL HP - Max Amps - SCIC | | | | | | | | | | | | | | | Contactor NEMA Size |
|---|---|---|---|---|---|---|---|---|---|---|---|---|---|---|---|---|---|
| | | 200 VAC | | | 208 VAC | | | 230 VAC | | | 460 VAC | | | 575 VAC | | | |
| | | HP | A | kA | HP | A | kA | HP | A | kA | HP | A | kA | HP | A | kA | |
| SMS3R-S0-M-G15 | 1-8 | 2 | 8 | 50 | 2 | 8 | 50 | 2 | 8 | 50 | 5 | 8 | 25 | 5 | 8 | 14 | 0 |
| SMS3R-S0-M-G20 | 8-11 | 3 | 11 | 50 | 3 | 11 | 50 | 3 | 11 | 50 | 7.5 | 11 | 25 | 10 | 11 | 14 | |
| SMS3R-S0P-M-G30 | 11-17 | 3 | 17 | 50 | 5 | 17 | 50 | 5 | 17 | 50 | 10 | 17 | 25 | 15 | 17 | 14 | 0+ |
| SMS3R-S1-M-G40 | 16-22 | 5 | 22 | 50 | 5 | 22 | 50 | 7.5 | 22 | 50 | 15 | 22 | 25 | 20 | 22 | 14 | 1 |
| SMS3R-S1P-M-G50 | 20-28 | 7.5 | 28 | 50 | 7.5 | 28 | 50 | 10 | 28 | 50 | 20 | 28 | 25 | 25 | 28 | 14 | 1+ |
| SMS3R-S1P-M-G60 | 24-34 | 10 | 34 | 50 | 10 | 34 | 50 | 10 | 34 | 50 | 25 | 34 | 25 | 30 | 32 | 14 | |
| SMS3R-S2-M-G80 | 32-45 | 10 | 45 | 50 | 10 | 45 | 50 | 15 | 45 | 50 | 30 | 45 | 25 | 40 | 45 | 14 | 2 |
| SMS3R-S2-M-G100 | 40-52 | 15 | 57 | 50 | 15 | 57 | 50 | 20 | 57 | 50 | 40 | 52 | 25 | 50 | 52 | 14 | |
| SMS3R-S3-M-G100 | 40-57 | 15 | 57 | 50 | 15 | 57 | 50 | 20 | 57 | 50 | 40 | 57 | 25 | 50 | 57 | 14 | 3 |
| SMS3R-S3-M-G125 | 50-71 | 20 | 71 | 65 | 20 | 71 | 65 | 25 | 71 | 65 | 50 | 71 | 35 | 60 | 71 | 18 | |
| SMS3R-S3P-M-G150 | 60-85 | 25 | 85 | 65 | 25 | 85 | 65 | 30 | 85 | 65 | 60 | 85 | 35 | 75 | 77 | 18 | 3+ |
| SMS3R-S3P-M-G200 | 80-DPV* | 30 | 92 | 65 | 30 | 88 | 65 | 40 | 104 | 65 | 75 | 96 | 35 | 75 | 77 | 18 | |
| SMS3R-S4-M-G200 | 80-114 | 30 | 114 | 65 | 40 | 114 | 65 | 40 | 114 | 65 | 75 | 114 | 35 | 100 | 99 | 18 | 4 |
| SMS3R-S4-M-G250 | 100-DPV* | 40 | 120 | 65 | 40 | 114 | 65 | 50 | 130 | 65 | 100 | 124 | 35 | - | - | - | |
| SMS3R-S5-M-G300 | 120-171 | 50 | 171 | 65 | 60 | 171 | 65 | 60 | 171 | 65 | 125 | 171 | 35 | - | - | - | 5 |
| SMS3R-S5-M-G400 | 171-228 | 75 | 228 | 65 | 75 | 228 | 65 | 75 | 228 | 65 | 150 | 228 | 35 | - | - | - | |
| SMS3R-S5P-M-G500 | 228-285 | 100 | 285 | 65 | 100 | 285 | 65 | 100 | 285 | 65 | 200 | 285 | 35 | - | - | - | 5+ |
| SMS3R-S5P-M-G600 | 285-342 | 100 | 342 | 65 | 100 | 342 | 65 | 125 | 342 | 65 | 250 | 342 | 35 | - | - | - | |
| SMS3R-S5P-M-G800 | 324-DPV* | 125 | 359 | 65 | 125 | 343 | 65 | 150 | 360 | 65 | 300 | 361 | 35 | - | - | - | |
| SMS3R-S5-6M-G300 | - | - | - | - | - | - | - | - | - | - | - | - | - | 150 | 171 | 18 | - |
| SMS3R-S5-6M-G400 | - | - | - | - | - | - | - | - | - | - | - | - | - | 200 | 228 | 18 | |
| SMS3R-S5P-6M-G500 | - | - | - | - | - | - | - | - | - | - | - | - | - | 250 | 285 | 18 | |
| SMS3R-S5P-6M-G600 | - | - | - | - | - | - | - | - | - | - | - | - | - | 300 | 289 | 18 | |

**DPV = Differs per voltage*

*****Use SFA Range or Max. SFA when sizing for submersible motor applications. If an amperage value for SFA is not published on the motor nameplate, consider SFA range to be FLA range.***

## SUBMONITOR CONNECT STARTER (NON-COMBINATION)

| Model No. | 3-Phase UL HP - MAX AMPS - SCIC | | | | | | | | | | | | | | | Contactor NEMA Size |
|---|---|---|---|---|---|---|---|---|---|---|---|---|---|---|---|---|
| | 200VAC | | | 208VAC | | | 230VAC | | | 460VAC | | | 575VAC | | | |
| | HP | A | kA | HP | A | kA | HP | A | kA | HP | A | kA | HP | A | kA | |
| SMS3R-S00-M | 2 | 8 | 5 | 2 | 8 | 5 | 3 | 10 | 5 | 5 | 8 | 5 | 7.5 | 9 | 5 | 0 |
| SMS3R-S0P-M | 7.5 | 25 | 5 | 7.5 | 24 | 5 | 10 | 28 | 5 | 15 | 21 | 5 | 20 | 22 | 5 | 0+ |
| SMS3R-S1P-M | 15 | 48 | 5 | 15 | 46 | 5 | 15 | 42 | 5 | 30 | 40 | 5 | 30 | 32 | 5 | 1+ |
| SMS3R-S2-M | 20 | 62 | 5 | 20 | 59 | 5 | 25 | 68 | 5 | 40 | 52 | 5 | 50 | 52 | 5 | 2 |
| SMS3R-S3-M | 30 | 92 | 10 | 30 | 88 | 10 | 40 | 104 | 10 | 60 | 77 | 10 | 75 | 77 | 10 | 3 |
| SMS3R-S3P-M | 30 | 92 | 10 | 30 | 88 | 10 | 40 | 104 | 10 | 75 | 96 | 10 | 75 | 77 | 10 | 3+ |
| SMS3R-S4-M | 40 | 120 | 10 | 40 | 114 | 10 | 50 | 130 | 10 | 100 | 124 | 10 | 100 | 99 | 10 | 4 |
| SMS3R-S4P-M | 60 | 177 | 10 | 60 | 169 | 10 | 75 | 192 | 10 | 150 | 180 | 10 | - | - | - | 4+ |
| SMS3R-S5-M | 100 | 285 | 18 | 100 | 273 | 18 | 125 | 312 | 18 | 250 | 302 | 18 | - | - | - | 5 |
| SMS3R-S5P-M | 125 | 359 | 18 | 125 | 343 | 18 | 150 | 360 | 18 | 300 | 361 | 18 | - | - | - | 5+ |
| SMS3R-S4P/6M | - | - | - | - | - | - | - | - | - | - | - | - | 150 | 144 | 10 | - |
| SMS3R-S5/6M | - | - | - | - | - | - | - | - | - | - | - | - | 250 | 242 | 18 | - |
| SMS3R-S5P/6M | - | - | - | - | - | - | - | - | - | - | - | - | 300 | 289 | 18 | - |

## OPTIONS (FACTORY INSTALLABLE)

| Model No. | Description |
|---|---|
| SMS-SRG | Surge Supressor, Universal, Corner Grounded Delta Config. |
| SMS-SRG-240V | Surge Supressor 240VAC, delta power configuration |
| SMS-SRG-480V | Surge Supressor 480VAC, delta power configuration |
| SMS-SRG-600V | Surge Supressor 600VAC, delta power configuration |
| SMS-HOA-KEY | Hand-Off-Auto Key Switch Option |
| SMS-STSP | Start/Stop Pushbutton Control in lieu of HOA switch |
| SMS-HOA-START | Start Pushbutton when HOA in HAND |
| SMS-CPT-100VA | 100VA CPT to accommodate beelow options |
| SMS-CLK-120V* | 120V, 7 Day, 24 Hour Programmable Clock |
| SMS-RPL-120V* | Factory Installed Run Pilot Light, Green, 120VAC |
| SMS-FPL-120V* | Factory Installed Fault Pilot Light, Red, 120VAC |

**Options must be combined with SMS-CPT-100VA*

FRANKLIN CONTROL SYSTEMS

# SMS SUBMONITOR CONNECT STARTER - DIMENSIONS

## DIMENSIONS

| Starter | Dimensions (in) | | |
|---|---|---|---|
| | H | W | D |
| SMS3R-S0-M-G15 | 22 | 15 | 8 |
| SMS3R-S0-M-G20 | | | |
| SMS3R-S0P-M-G30 | | | |
| SMS3R-S1-M-G40 | | | |
| SMS3R-S1P-M-G50 | | | |
| SMS3R-S1P-M-G60 | | | |
| SMS3R-S2-M-G80 | | | |
| SMS3R-S2-M-G100 | | | |
| SMS3R-S3-M-G100 | | | |
| SMS3R-S3-M-G125 | | | |
| SMS3R-S3P-M-G150 | | | |
| SMS3R-S4-M-G200 | 32 | 15 | 8 |
| SMS3R-S4-M-G250 | | | |
| SMS3R-S5-M-G300 | 42 | 25 | 15 |
| SMS3R-S5-M-G400 | | | |
| SMS3R-S5P-M-G500 | 62 | 25 | 15 |
| SMS3R-S5P-M-G600 | | | |
| SMS3R-S5P-M-G800 | | | |
| SMS3R-S00-M | 16 | 12 | 8 |
| SMS3R-S0P-M | | | |
| SMS3R-S1P-M | | | |
| SMS3R-S2-M | 22 | 15 | 8 |
| SMS3R-S3-M | | | |
| SMS3R-S3P-M | | | |
| SMS3R-S4-M | 32 | 15 | 8 |
| SMS3R-S4P-M | 42 | 25 | 15 |
| SMS3R-S5-M | | | |
| SMS3R-S5P-M | | | |

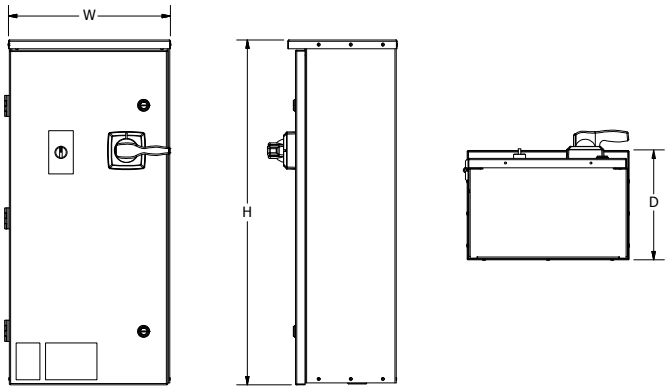


## WIRING DIAGRAM

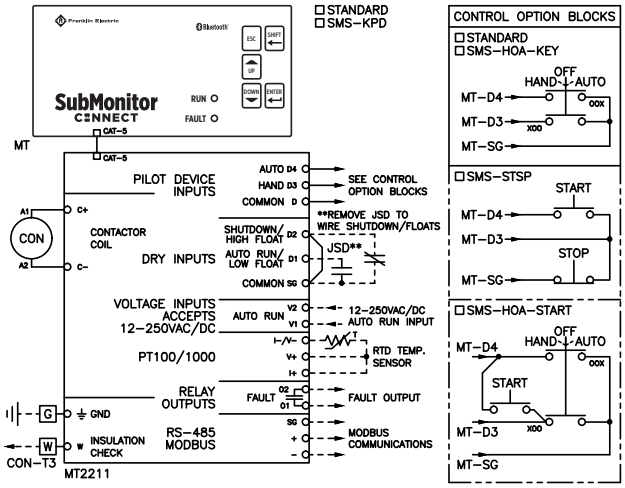


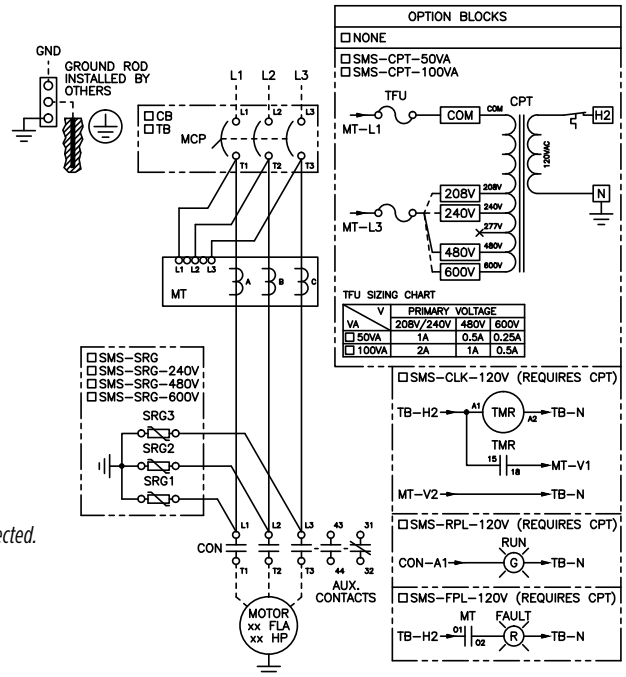


*NOTE: standard wiring schematic shown, actual product wiring may vary depending on options selected. Dashed lines indicate field wiring.*

# SMS SUBMONITOR CONNECT STARTER - SPECIFICATIONS

## SPECIFICATIONS

| | | |
|---|---|---|
| **Starter Type** | | |
| Standard or combination (service rated, suitable for use as a service disconnect) | | |
| NEMA Type 3R Enclosed Outdoor Rated | | |
| **User Interface** | | |
| Settings Adjustments | | 32 character, backlit NEMA 4X display |
| | | FE Connect Mobile App connected via Bluetooth |
| Hand/Off/Auto | | Door mounted 3-position switch |
| **Standard Control Operations** | | |
| Inputs | Voltage Auto | Accepts 12-250VAC/DC. Applying voltage will send a run command to the starter when in Auto Mode. |
| | Dry Contact Auto | Default: Normally Open. When active (closed between D1 and D), the SubMonitor will start the motor in Auto Mode. |
| | Low Float | Option: Used with D2 to make up float operation in fill or drain mode |
| | Dry Contact Shutdown | Default: When active (open between D2 and D), the SubMonitor will stop the motor in all modes. |
| | High Float | Option: Used with D1 to make up float operation in fill or drain mode |
| | RS-485 | Modbus RTU slave |
| | PT100/1000 | On/Off, adjustable: 0-100 C |
| Output | Fault Relay | Normally Open Relay Contact. 1Aa @ 240VAC 212 F |
| Operational | Overload Type | Electronic, Simulated $I^2T$ trip curve |
| | Power Fail Modes | Restart in last mode (Hand/Off/Auto) |
| | | Restart in off mode |
| | On/Off Time Delay | On/Off, adjustable: 1-60seconds |
| | Backspin Delay | On/Off, adjustable: 2 seconds - 60 minutes |
| | Fault Reset | Adjustable: manual or automatic (default differs per motor protection feature) |
| | Starts | 6/hour, 20 seconds max start time @ 400% FLA, 30 seconds max start time @ 300% FLA |
| **Enviromental** | | |
| Ambient Operating Temp | | -5 °F to 140 °F (-20 °C to 60 °C) |
| Ambient Storage Temp | | -5 °F to 185 °F (-20 °C to 85 °C) |
| Relative Humidity | | 5% to 95% non-condensing |

| Motor / Soft Starter Protection | Adjustment / Description | Default Setting |
|---|---|---|
| Overload Current Setting Range | Differs per model | Per SFA |
| Overload Trip Class | Adjustable: 5-30 | 10 |
| Overload Service Factor | Adjustable: 1.00-2.00 | 1.15 |
| Under Power (Dry Run) | On/Off/Alarm, adjustable: 1-99% of nominal | On / 65% |
| Over Power | On/Off/Alarm, adjustable: 101-200% of nominal | On / 125% |
| Under Voltage | On/Off/Alarm, adjustable: 80-99% of nominal | On / 90 % |
| Over Voltage | On/Off/Alarm, adjustable: 101-125% of nominal | On / 110 % |
| Voltage Phase Loss | Always on | On / Trips if below 60VAC |
| Ground Fault (UL 1053 Certified) | On/Off/Alarm, adjustable: 1-10 Amps | On / 1A |
| Cycle Fault | On/Off, Start Limit adjustable: 2-100 | On |
| Warm Start Provision | On/Off, delays motor restart based on calcualted motor temp | On |
| SMARTSTART™ Protection | Adjustment/Description | Default Setting |
| Current Phase Unbalance | On/Off, adjustable: 1-50% | On / 5% |
| Locked Rotor/Stall | On/Off, trips if current exceeds 300% max amps for 0.5s | On |
| Out of Calibration | On/Off, trips after 10 seconds if max amps setting is incorrect | Off |
| Max Time to Start | On/Off, regardless of max amps or $I^2T$ trip curve, always trip at start if starting current is outside of an acceptabke range and still decreasing after 10 seconds | Off |

FRANKLIN CONTROL SYSTEMS

# IPS-RV INTELLIGENT PUMP SOFT STARTER

Integrated electronic pump protection overload and power metering and Modbus TRU communications.
3Ø, 50/60 Hz, 200~600 VAC, 2~250 hp

## INTEGRATED TRU-POWER™ ELECTRONIC PROTECTION

- Eliminates need for costly pump protection relays
- Dry pump detection using power (nuisance trip-free); time-based automatic restart and well recovery mode
- Features a wide-range, adjustable, class 5-30 electronic overload
- Provides superior motor protection from the following conditions:
  - Over/under power (dry-run)
  - Voltage phase loss
  - Stalled/locked rotor
  - Ground fault (UL1053 certified)
  - Over/under voltage protection
  - Voltage and current phase unbalance
  - Cycle fault
  - Voltage phase reversal

## SOFT STARTER FEATURES

- Full hp rated bypass contactor
- Across-the-line start for emergency situations (turns the soft-starter into a standard IPS)
- Start modes feature an adjustable current limit, initial voltage, and start time with a torque boost feature
- Stop modes include:
  - Coast to stop
  - Linear deceleration (reduces water-hammer effect)
  - Adjustable stop voltage and stop time
- SCR over-temperature detection
- Shorted SCR detection

## TRU-POWER™ SENSING

Tru-power™ sensing protects pumps from dry-run, dead head, run-out, and jammed impeller conditions - keeping you online and preventing costly premature pump failure. Along with superior protection, measuring underload using power allows for a more flexible trip range, as opposed to measuring by current, which requires a more precise set point. The end result is the elimination of nuisance trips.

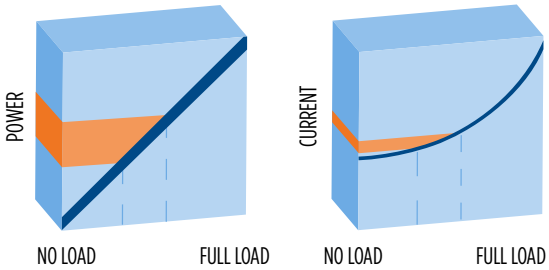


*NOTE: Power is linear for superior load monitoring*

## BUILT-IN MONITORING & FAULT LOGGING

- View voltage, current, power factor, and more through an intuitive display
- Built-in fault log, counter and parameter change log: records last 15 fault types with power condition values, stores how many times each fault type has occurred (up to 255 count), and logs changes to parameter settings (e.g. FLA, OV/UV, under power)
- Built-in Modbus RTU communications card

# IPS-RV INTELLIGENT PUMP STARTER

## EASY TO SET-UP AND USE

- Inside the display shows an easy to use menu for setting a wealth of parameters. Adjust any protective or control setting in seconds. For example, choose how long to allow for dry well recovery, set run time periods, and on/off delays. All this with just a few intuitive keystrokes. The IPS-RV ships with factory default settings pre-programmed for optimal submersible pump protection.

## INDUSTRIAL GRADE CONSTRUCTION

- Door mounted heavy-duty HOA switch
- Housed in an outdoor rated, gasketed, NEMA 3R enclosure
- Multi-tap control power transformer with integrated secondary protection accommodates common motor voltages. No fuses required!
- Includes 120 VAC control power for field devices

## ADVANCED PROGRAMMABLE PUMP CONTROL

- Automatic fault reset
- Backspin delay - prevents start-up while system is draining
- On and off delay settings
- Well recovery mode (up to 48 hours)
- Minimum run time based on last input
- 12-120 V input for remote start/stop
- Dry contact input for remote start/stop
- Dry contact inputs for float switches
- Analog input for (selectable) 0-10 V, 4-20 mA, or 10k thermistor, viewable as a Modbus point

## STANDARD CIRCUIT BREAKER DISCONNECT*

- UL 489 circuit breaker provides branch and short circuit protection
- No fuses required – saves time and money
- Lockable handle for safety

**Service entrance rated.*

*The internal keypad and LCD make the IPS-RV intuitive and versatile. Parameters are easily changed and faults are clearly displayed.*

*Standard control features include a 12-120V auto run input (irrigation control system, etc.), shutdown terminal for applications such as a low level float switch, and more.*

*The multi-tap power transformer accepts inputs of 200V, 230 V, and 460 V*

FRANKLIN CONTROL SYSTEMS

# IPS-RV INTELLIGENT PUMP SOFT STARTER - ORDERING & SIZING INFORMATION

## IPS-RV (200~460 VAC)

3-Phase, 50/60 Hz, 200~460 VAC, NEMA Type 3R Enclosed - Combination Soft Starter. Includes Service Entrance Circuit Breaker Disconnect.

| Part Number | 200 V - 460 V 3-Phase SFA Range** (A) | 3-PHASE HP (UL) / Max. SFA** | | | | | | | | Contactor NEMA Size |
|---|---|---|---|---|---|---|---|---|---|---|
| | | 200 V | | 230 V | | 460 V | | 600 V | | |
| | | HP | SFA | HP | SFA | HP | SFA | HP | SFA | |
| IPS3R-RV-S1-J-G15 | 6~8 | 2 | 8 | 2 | 8 | 5 | 8 | - | - | 1 |
| IPS3R-RV-S1-J-G20 | 8-11 | 3 | 11 | 3 | 11 | 7.5 | 11 | - | - | |
| IPS3R-RV-S1-J-G30 | 11-17 | 3 | 17 | 5 | 17 | 10 | 17 | - | - | |
| IPS3R-RV-S1-J-G40 | 16~22 | 5 | 22 | 7.5 | 22 | 15 | 22 | - | - | |
| IPS3R-RV-S1P-J-G50 | 20~28 | 7.5 | 28 | 10 | 28 | 20 | 28 | - | - | 1+ |
| IPS3R-RV-S1P-J-G60 | 24~34 | 10 | 34 | 10 | 34 | 25 | 34 | - | - | |
| IPS3R-RV-S2-J-G80 | 32~45 | 10 | 45 | 15 | 45 | 30 | 45 | - | - | 2 |
| IPS3R-RV-S3-J-G100 | 40~57 | 15 | 57 | 20 | 57 | 40 | 57 | - | - | 3 |
| IPS3R-RV-S3-J-G125 | 50~71 | 20 | 71 | 25 | 71 | 50 | 71 | - | - | |
| IPS3R-RV-S3P-J-G150 | 60~85 | 25 | 85 | 30 | 85 | 60 | 85 | - | - | 3+ |
| IPS3R-RV-S4-J-G200 | 80~114 | 30 | 114 | 40 | 114 | 75 | 114 | - | - | 4 |
| IPS3R-RV-S4-J-G250 | 100~DPV* | 40 | 120 | 50 | 130 | 100 | 124 | - | - | |
| IPS3R-RV-S5-J-G250 | 100~142 | 40 | 142 | 50 | 142 | 100 | 142 | - | - | 5 |
| IPS3R-RV-S5-J-G300 | 120~170 | 50 | 170 | 50 | 171 | 125 | 171 | - | - | |
| IPS3R-RV-S5-J-G400 | 160~220 | 60 | 220 | 75 | 220 | 150 | 220 | - | - | |
| IPS3R-RV-S5-J-G500 | 201~285 | 100 | 285 | 100 | 285 | 200 | 285 | - | - | |
| IPS3R-RV-S5-J-G600 | 240~320 | 100 | 320 | 100 | 320 | 250 | 320 | - | - | |

**DPV = Differs per voltage*

*****Use SFA Range or Max. SFA when sizing for submersible motor applications. If an amperage value for SFA is not published on the motor nameplate, consider SFA range to be FLA range.***

## IPS-RV (200~460 VAC)

3-Phase, 50/60 Hz, 200~460 VAC, NEMA Type 3R Enclosed - Standard Soft Starter. Disconnect not Included.

| Part Number | 200 V - 460 V 3-Phase SFA Range** (A) | 3-PHASE HP (UL) / Max. SFA** | | | | | | | | Contactor NEMA Size |
|---|---|---|---|---|---|---|---|---|---|---|
| | | 200 V | | 230 V | | 460 V | | 600 V | | |
| | | HP | SFA | HP | SFA | HP | SFA | HP | SFA | |
| IPS3R-RV-S2-J-50 | 1~50 | 15 | 50 | 15 | 50 | 30 | 50 | - | - | 2 |
| IPS3R-RV-S3P-J-85 | 1~85 | 25 | 85 | 30 | 85 | 77 | 85 | - | - | 3+ |
| IPS3R-RV-S4-J-130 | 50~DPV* | 40 | 120 | 50 | 130 | 100 | 124 | - | - | 4 |
| IPS3R-RV-S5-J-170 | 50~170 | 50 | 170 | 60 | 170 | 125 | 170 | - | - | 5 |
| IPS3R-RV-S5-J-220 | 151~220 | 60 | 220 | 75 | 220 | 150 | 220 | - | - | |
| IPS3R-RV-S5-J-270 | 176~270 | 75 | 270 | 100 | 270 | 200 | 270 | - | - | |
| IPS3R-RV-S5-J-320 | 201~320 | 100 | 320 | 125 | 320 | 250 | 320 | - | - | |

**DPV = Differs per voltage*

*****Use SFA Range or Max. SFA when sizing for submersible motor applications. If an amperage value for SFA is not published on the motor nameplate, consider SFA range to be FLA range.***

# IPS-RV INTELLIGENT PUMP SOFT STARTER - ORDERING & SIZING INFORMATION

## IPS-RV (600 VAC)

3-Phase, 50/60 Hz, 600 VAC, NEMA Type 3R Enclosed - Combination Soft Starter. Includes Service Entrance Circuit Breaker Disconnect

| Part Number | 600 V 3-Phase SFA Range** (A) | 3-PHASE HP (UL) / Max. SFA** | | | | | | | | Contactor NEMA Size |
|---|---|---|---|---|---|---|---|---|---|---|
| | | 200 V | | 230 V | | 460 V | | 600 V | | |
| | | HP | SFA | HP | SFA | HP | SFA | HP | SFA | |
| IPS3R-RV-S1-6J-G15 | 6~8 | - | - | - | - | - | - | 5 | 8 | 1 |
| IPS3R-RV-S1-6J-G20 | 8-11 | - | - | - | - | - | - | 10 | 11 | |
| IPS3R-RV-S1-6J-G30 | 11-17 | - | - | - | - | - | - | 15 | 17 | |
| IPS3R-RV-S1-6J-G40 | 16~22 | - | - | - | - | - | - | 20 | 22 | |
| IPS3R-RV-S1P-6J-G50 | 20~27 | - | - | - | - | - | - | 25 | 27 | 1+ |
| IPS3R-RV-S1P-6J-G60 | 24~34 | - | - | - | - | - | - | 30 | 34 | |
| IPS3R-RV-S2-6J-G80 | 32~45 | - | - | - | - | - | - | 40 | 45 | 2 |
| IPS3R-RV-S3-6J-G100 | 40~57 | - | - | - | - | - | - | 50 | 57 | 3 |
| IPS3R-RV-S3-6J-G125 | 50~71 | - | - | - | - | - | - | 60 | 71 | |
| IPS3R-RV-S3-6J-G150 | 60~77 | - | - | - | - | - | - | 75 | 77 | |
| IPS3R-RV-S5-6J-G200 | 80~114 | - | - | - | - | - | - | 100 | 114 | 5 |
| IPS3R-RV-S5-6J-G250 | 100~142 | - | - | - | - | - | - | 125 | 142 | |
| IPS3R-RV-S5-6J-G300 | 120~170 | - | - | - | - | - | - | 150 | 170 | |
| IPS3R-RV-S5-6J-G400 | 160~220 | - | - | - | - | - | - | 200 | 220 | |
| IPS3R-RV-S5-6J-G500 | 201~285 | - | - | - | - | - | - | 250 | 285 | |
| IPS3R-RV-S5-6J-G600 | 240~289 | - | - | - | - | - | - | 300 | 289 | |

*****Use SFA Range or Max. SFA when sizing for submersible motor applications. If an amperage value for SFA is not published on the motor nameplate, consider SFA range to be FLA range.***

## IPS-RV (600 VAC)

3-Phase, 50/60 Hz, 600 VAC, NEMA Type 3R Enclosed - Standard Soft Starter. Disconnect not Included

| Part Number | 600 V 3-Phase SFA Range** (A) | 3-PHASE HP (UL) / Max. SFA** | | | | | | | | Contactor NEMA Size |
|---|---|---|---|---|---|---|---|---|---|---|
| | | 200 V | | 230 V | | 460 V | | 600 V | | |
| | | HP | SFA | HP | SFA | HP | SFA | HP | SFA | |
| IPS3R-RV-S2-6J-50 | 1-50 | - | - | - | - | - | - | 40 | 50 | 2 |
| IPS3R-RV-S3P-6J-77 | 1-77 | - | - | - | - | - | - | 75 | 77 | 3+ |
| IPS3R-RV-S5-6J-170 | 50-170 | - | - | - | - | - | - | 150 | 170 | 5 |
| IPS3R-RV-S5-6J-220 | 151-220 | - | - | - | - | - | - | 200 | 220 | |
| IPS3R-RV-S5-6J-289 | 201-289 | - | - | - | - | - | - | 300 | 289 | |

*****Use SFA Range or Max. SFA when sizing for submersible motor applications. If an amperage value for SFA is not published on the motor nameplate, consider SFA range to be FLA range.***

## OPTIONS (FACTORY INSTALLABLE)

| Part Number | Description |
|---|---|
| IPS-SRG240 | Surge Suppressor, 200/230 V |
| IPS-SRG480 | Surge Suppressor, 460 V |
| IPS-SRG600 | Surge Suppressor, 600 V |
| IPS-RV-SHT | Shunt Trip, will trip MCCB in the event of a SCR short |
| IPS-SRG | Surge Supressor, Universal, Corner Grounded Delta Configuration |
| IPS-RPL | Run Pilot Light, Green |
| IPS-FPL | Fault Pilot Light, Red |
| IPS-SPB | Start Push button Control |
| IPS-STSP | Start/Stop Push button Control (In Lieu of Hand/Off/Auto Switch) |
| IPS-24 | 24 VAC Control Circuit (In Lieu of 120 VAC Control Circuit) |

FRANKLIN CONTROL SYSTEMS

# IPS-RV INTELLIGENT PUMP SOFT STARTER - DIMENSIONS & WIRING DIAGRAM

## DIMENSIONS

| Combination Soft Starter | Dimensions (in) | | |
|---|---|---|---|
| | H | W | D |
| IPS3R-RV-S1-J-GXX | 32 | 15 | 10 |
| IPS3R-RV-S1P-J-GXX | | | |
| IPS3R-RV-S2-J-GXX | | | |
| IPS3R-RV-S3-J-GXXX | | | |
| IPS3R-RV-S3P-J-GXXX | | | |
| IPS3R-RV-S4-J-GXXX | 36 | 24 | 12 |
| IPS3R-RV-S5-J-G250 | 42 | 25 | 12 |
| IPS3R-RV-S5-J-G300 | | | |
| IPS3R-RV-S5-J-G400 | | | |
| IPS3R-RV-S5-J-G500 | 62 | 25 | 15 |
| IPS3R-RV-S5-J-G600 | | | |
| **Standard Soft Starter** | **H** | **W** | **D** |
| IPS3R-RV-S2-J-50 | 32 | 15 | 10 |
| IPS3R-RV-S3P-J-XX | | | |
| IPS3R-RV-S4-J-130 | 36 | 24 | 12 |
| IPS3R-RV-S5-J-XXX | 42 | 25 | 12 |

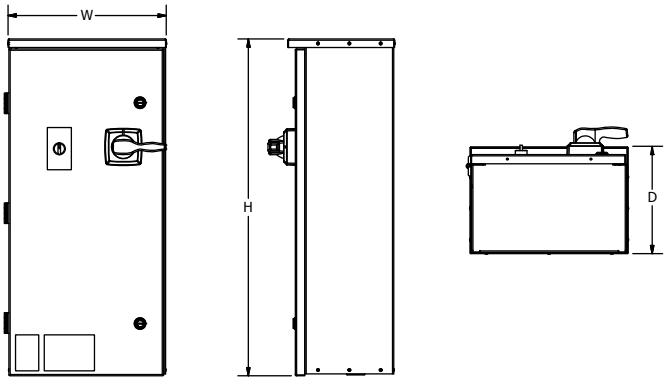


## WIRING DIAGRAM

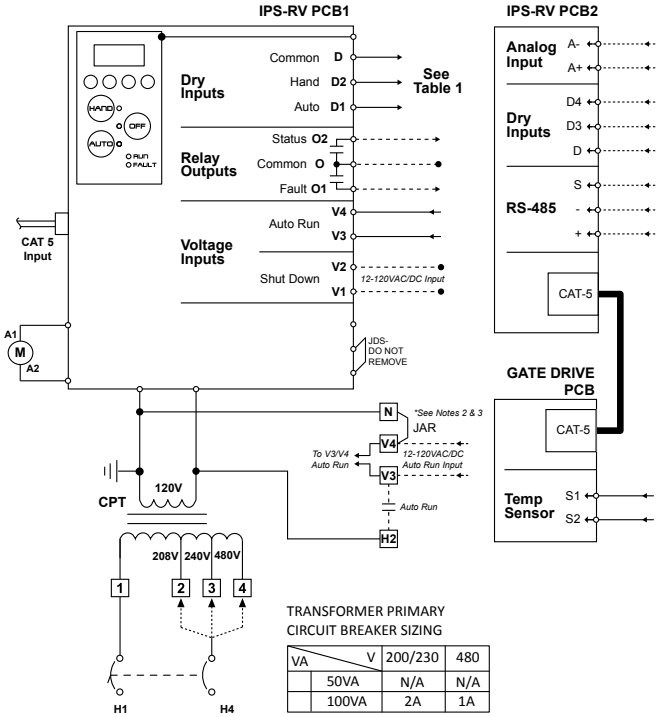


TRANSFORMER PRIMARY CIRCUIT BREAKER SIZING

| VA \ V | 200/230 | 480 |
|---|---|---|
| 50VA | N/A | N/A |
| 100VA | 2A | 1A |

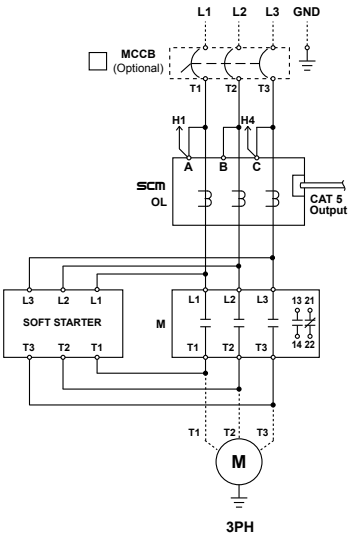


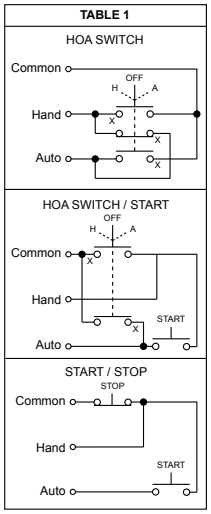


*NOTE: Standard wiring schematic shown, actual product wiring may vary depending on options selected. Dashed lines indicate field wiring. When jumper jar is present, terminals V3 & H2 act as connections for a normally open, dry contact, auto run input. Remove jumper jar to use V3 & V4 terminals as a voltage, auto run input. Apply 12-120 VAC/DC to energize.*

# IPS-RV INTELLIGENT PUMP SOFT STARTER - SPECIFICATIONS

## SPECIFICATIONS

| | | |
|---|---|---|
| **Soft Starter Type** | | |
| Standard or combination (service rated, suitable for use as a service disconnect) | | |
| NEMA Type 3R Enclosed | | |
| **User Interface** | | |
| Settings Adjustments | | Internal |
| Hand/Off/Auto | | Door mounted 3-position switch |
| **Standard Control Operations** | | |
| Inputs | Voltage Auto | Accepts 12-130 VAC/DC. Applying voltage will send a run command to the starter when in auto mode. |
| | Dry Contact Auto | Normally open dry contact. When closed, the starter will be commanded to run when in auto mode. |
| | Shutdown | Accepts 12-130 VAC/DC. Applying voltage will open the contactor and the starter will not accept a run command. Hand/Off/Auto LEDs will flash. |
| | Float Switches | (2) Programmable normally open or normally closed dry contacts. |
| | RS-485 | Modbus RTU slave |
| | Analog | Selectable: 0-10 V, 4-20mA, 10k Thermistor, viewable as a Modbus point |
| Outputs | Status Relay | Normally open relay contact, 0.3A @ 125 VAC, 1A @ 24 VAC |
| | Fault Relay | Normally open relay contact, 0.3A @ 125 VAC, 1A @ 24 VAC |
| Operational | Overload Type | Electronic, I2T trip curve |
| | Power Fail Modes | Restart in last mode (Hand/Off/Auto) with no delay (default) |
| | | Restart in off mode |
| | | Restart in off mode if power failure lasts longer than 2 seconds. Restart in last mode if power failure is less than 2 seconds. |
| | On/Off Time Delay | On/Off, adjustable: 0.1-99 seconds |
| | Fault Reset | Adjustable: manual or automatic (default differs per motor protection feature) |
| | Starts | 6/hour, 20 seconds max. start time @ 400% FLA, 30 seconds max. start time @ 300% FLA |
| **Environmental** | | |
| Ambient Operating Temp | | -5 °F to 140 °F (-20 °C to 60 °C) |
| Ambient Storage Temp | | -5 °F to 185 °F (-20 °C to 85 °C) |
| Relative Humidity | | 5% to 95% non-condensing |

| Motor / Soft Starter Protection | Adjustment / Description | Default Setting |
|---|---|---|
| Overload Current Setting Range | Differs per model | Per SFA |
| Overload Trip Class | Adjustable: 5-30 | 10 |
| Overload Service Factor | Adjustable: 0.00-2.00 | 1.15 |
| Under Power | On/Off, adjustable: 0-99% of measured electrical input | On / 60% |
| Over Power | On/Off, adjustable: 101-200% of measured electrical input | On / 120% |
| Over / Under Voltage | On/Off, adjustable: +5-25% over/under the nominal voltage setting | On / 10% |
| Voltage Phase Unbalance | On/Off, adjustable: 1-20% voltage phase deviation | On / 3% |
| Voltage Phase Loss | Always on, adjustable: 1-50% voltage phase deviation | 10% |
| Voltage Phase Sequence Reversal | On/Off, trips within 0.1 seconds upon voltage phase reversal detection | On |
| Ground Fault (UL 1053 Certified) | On/Off, adjustable: 1.0-9.9A | On / 1A |
| Cycle Fault | On/Off, adjustable: trip if cycle rate exceeds 20 starts/minute | On |
| Warm Start Provision | On/Off, delays motor restart based on calculated motor temperature | On |
| Current Phase Unbalance | On/Off, adjustable: 1-50% current phase unbalance | On / 5% |
| Locked Rotor / Stall | On/Off, trips within 0.5 seconds | On |
| Shorted SCR | Always on: trips upon detection of a shorted SCR or no motor | On |
| Open SCR | Always on: trips if no current is detected during start-up or bypass | On |
| SCR Over-Temperature | Always on: trips if the SCR temperature reaches 125 °C | On |
| Across-the-Line Start | On/Off: allows the user to start the motor across-the-line. (Turns soft starter into standard IPS) | Off |

# SSP SMARTSTART™ PUMP STARTER

3Ø, 50/60 Hz, 200~600 VAC, 1~130 FLA (differs per model)

## INTEGRATED ELECTRONIC PROTECTION

- Enhanced Class 10 electronic overload protection specifically designed for submersible motors; Built-in 1.15 service factor compensation
- Underload (dry-run protection)
- Current phase unbalance protection
- Cycle fault protection
- Locked rotor and stall protection

## MULTI-VOLTAGE OPERATING RANGE*

- Accepts 200-600 VAC directly, true plug and play
- Includes a dry contact auto-run input and fault relay output

** With Automation I/O*

## INDUSTRIAL GRADE CONSTRUCTION

- Door mounted heavy-duty HOA switch
- Housed in an outdoor rated, gasketed, NEMA 3R enclosure
- NEMA/IEC rated magnetic contactors feature 2.5 million electrical cycles at full rated current

## CIRCUIT BREAKER DISCONNECT (OPTIONAL)*

- UL 489 circuit breaker provides branch and short circuit protection
- No fuses required – saves time and money
- Lockable handle for safety

** Service entrance rated*

## REVOLUTIONARY MOTOR PROTECTION

- **Aware:** SMARTSTART™ protects your system from adverse dry-run conditions with built-in underload protection standard.
- **Watchful:** SMARTSTART™ detects harmful extended starting conditions with maximum time to start. Monitors motor in-rush current conditions and trips if the motor doesn't start within 10 seconds (class 10 overload) regardless of FLA setting.
- **Active:** Active current monitoring provides superior protection against locked rotor and stall conditions, tripping faster than a standard inverse trip curve, regardless of the FLA setting.

# SSP SMARTSTART™ PUMP STARTER - ORDERING & SIZING INFORMATION

## SMARTSTART™ PUMP STARTER

3-Phase, 50/60 Hz, 200~600 VAC, NEMA Type 3R Enclosed - Combination Starter. Includes Service Entrance Circuit Breaker Disconnect.

| Model No. | 200 V - 460 V SFA Range** (A) | 600 V SFA Range** (A) | 3-PHASE HP (UL) / Max. SFA** | | | | | | | | Contactor NEMA Size |
|---|---|---|---|---|---|---|---|---|---|---|---|
| | | | 200 V | | 230 V | | 460 V | | 600 V | | |
| | | | HP | SFA | HP | SFA | HP | SFA | HP | SFA | |
| SSP3R-S0-J-G15 | 6~8 | 6~8 | 2 | 8 | 2 | 8 | 5 | 8 | 5 | 8 | 0 |
| SSP3R-S0-J-G20 | 8~11 | 8~11 | 3 | 11 | 3 | 11 | 7.5 | 11 | 10 | 11 | |
| SSP3R-S0P-J-G30 | 11~17 | 11~17 | 3 | 17 | 5 | 17 | 10 | 17 | 15 | 17 | 0+ |
| SSP3R-S1-J-G40 | 16~22 | 16~22 | 5 | 22 | 7.5 | 22 | 15 | 22 | 20 | 22 | 1 |
| SSP3R-S1P-J-G50 | 20~28 | 20~28 | 7.5 | 28 | 10 | 28 | 20 | 28 | 25 | 28 | 1+ |
| SSP3R-S1P-J-G60 | 24~32 | 24~32 | 7.5 | 32 | 10 | 32 | 20 | 32 | 30 | 32 | |
| SSP3R-S2-J-G80 | 32~45 | 32~45 | 10 | 45 | 15 | 45 | 30 | 45 | 40 | 45 | 2 |
| SSP3R-S2-J-G100 | 40~52 | 40~52 | 15 | 52 | 15 | 52 | 40 | 52 | 50 | 52 | |
| SSP3R-S3-J-G125 | 50~71 | 50~71 | 20 | 71 | 25 | 71 | 50 | 71 | 60 | 71 | 3 |
| SSP3R-S3P-J-G150 | 60~80 | 60~77 | 25 | 80 | 30 | 80 | 60 | 80 | 75 | 77 | 3+ |
| SSP3R-S3P-J-G200 | 80~DPV* | NA | 30 | 92 | 40 | 104 | 75 | 96 | - | - | |

**DPV = Differs per voltage*

*****Use SFA Range or Max. SFA when sizing for submersible motor applications. If an amperage value for SFA is not published on the motor nameplate, consider SFA range to be FLA range.***

## SMARTSTART™ PUMP STARTER

3-Phase, 50/60 Hz, 200~600 VAC, NEMA Type 3R Enclosed - Standard Starter. Disconnect not Included.

| Model No. | 200 V - 460 V SFA Range** (A) | 600 V SFA Range** (A) | 3-PHASE HP (UL) / Max. SFA** | | | | | | | | Contactor NEMA Size |
|---|---|---|---|---|---|---|---|---|---|---|---|
| | | | 200 V | | 230 V | | 460 V | | 600 V | | |
| | | | HP | SFA | HP | SFA | HP | SFA | HP | SFA | |
| SSP3R-S1P-J-32 | 1~32 | 1~32 | 7.5 | 32 | 10 | 32 | 20 | 32 | 30 | 32 | 1+ |
| SSP3R-S2-J-52 | 22~52 | 22~52 | 15 | 52 | 15 | 52 | 40 | 52 | 50 | 52 | 2 |
| SSP3R-S3P-J-85 | 50~80 | 50~77 | 25 | 80 | 30 | 80 | 60 | 80 | 75 | 77 | 3+ |

**DPV = Differs per voltage*

*****Use SFA Range or Max. SFA when sizing for submersible motor applications. If an amperage value for SFA is not published on the motor nameplate, consider SFA range to be FLA range.***

## SMARTSTART™ PUMP STARTER

3-Phase, 50/60 Hz, 200~600 VAC, NEMA Type 1 Enclosed - Standard Starter. Disconnect not Included.

| Model No. | 200 V - 460 V SFA Range** (A) | 600 V SFA Range** (A) | 3-PHASE HP (UL) / Max. SFA** | | | | | | | | Contactor NEMA Size |
|---|---|---|---|---|---|---|---|---|---|---|---|
| | | | 200 V | | 230 V | | 460 V | | 600 V | | |
| | | | HP | SFA | HP | SFA | HP | SFA | HP | SFA | |
| SSP1-S1P-J-32 | 1~32 | 1~32 | 7.5 | 32 | 10 | 32 | 20 | 32 | 30 | 32 | 1+ |
| SSP1-S2-J-52 | 22~52 | 22~52 | 15 | 52 | 15 | 52 | 40 | 52 | 50 | 52 | 2 |
| SSP1-S3P-J-85 | 50~80 | 50~77 | 25 | 80 | 30 | 80 | 60 | 80 | 75 | 77 | 3+ |

**DPV = Differs per voltage*

*****Use SFA Range or Max. SFA when sizing for submersible motor applications. If an amperage value for SFA is not published on the motor nameplate, consider SFA range to be FLA range.***

FRANKLIN CONTROL SYSTEMS

# SSP SMARTSTART™ PUMP STARTER - DIMENSIONS

## OPTIONS (FACTORY INSTALLABLE)

| Model No. | Description |
|---|---|
| SSP-DHM | Digital Hour Meter |
| SSP-SRG240 | Surge Suppressor, 200/230 V |
| SSP-SRG480 | Surge Suppressor, 460 V |
| SSP-SRG600 | Surge Suppressor, 600 V |
| SSP-SRG | Surge Supressor, Universal, Corner Grounded Delta Configuration |
| SSP3R-S0-S2-UP | Upsized N3R enclosure to 32" x 15" x 8" |
| SSP3R-S3-S3P-UP | Upsized N3R enclosure to 42" x 25" x 12" |
| SSP-2FC | 2-Float Switch Input Terminals |
| SSP-RPL | Run Pilot Light |
| SSP-FPL | Fault Pilot Light |

## DIMENSIONS: NEMA 3R ENCLOSURE

| Combination Starter | Dimensions (in) | | |
|---|---|---|---|
| | H | W | D |
| SSP3R-S0-J-GXX | 22 | 15 | 10 |
| SSP3R-S0P-J-GXX | | | |
| SSP3R-S1-J-GXX | | | |
| SSP3R-S1P-J-GXX | | | |
| SSP3R-S2-J-GXX | | | |
| SSP3R-S3-J-GXX | 32 | 15 | 10 |
| SSP3R-S3P-J-GXXX | | | |
| **Standard Starter** | **H** | **W** | **D** |
| SSP3R-S1P-J-32 | 16 | 12 | 8 |
| SSP3R-S2-J-50 | | | |
| SSP3R-S3P-J-80 | | | |

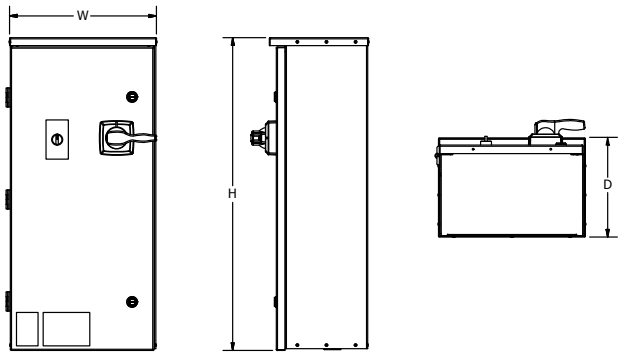


## DIMENSIONS: NEMA 1 ENCLOSURE

| Standard Starter | Dimensions (in) | | |
|---|---|---|---|
| | H | W | D |
| SSP1-S1P-J-32 | 16 | 7.5 | 6 |
| SSP1-S2-J-50 | | | |

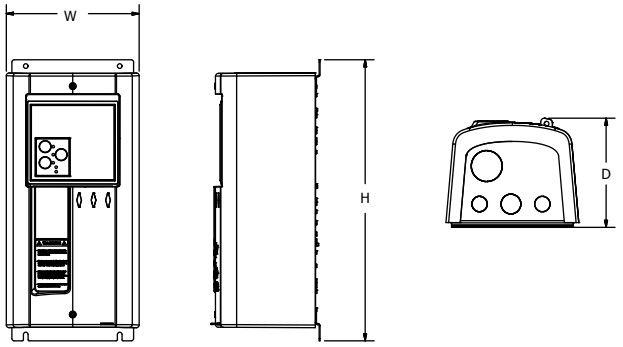


| Standard Starter | Dimensions (in) | | |
|---|---|---|---|
| | H | W | D |
| SSP1-S3P-J-80 | 16 | 12 | 8 |

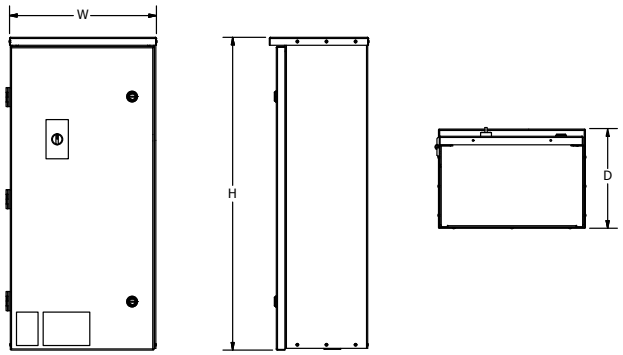

# SSP SMARTSTART™ PUMP STARTER - WIRING DIAGRAM & SPECIFICATIONS

## WIRING DIAGRAM

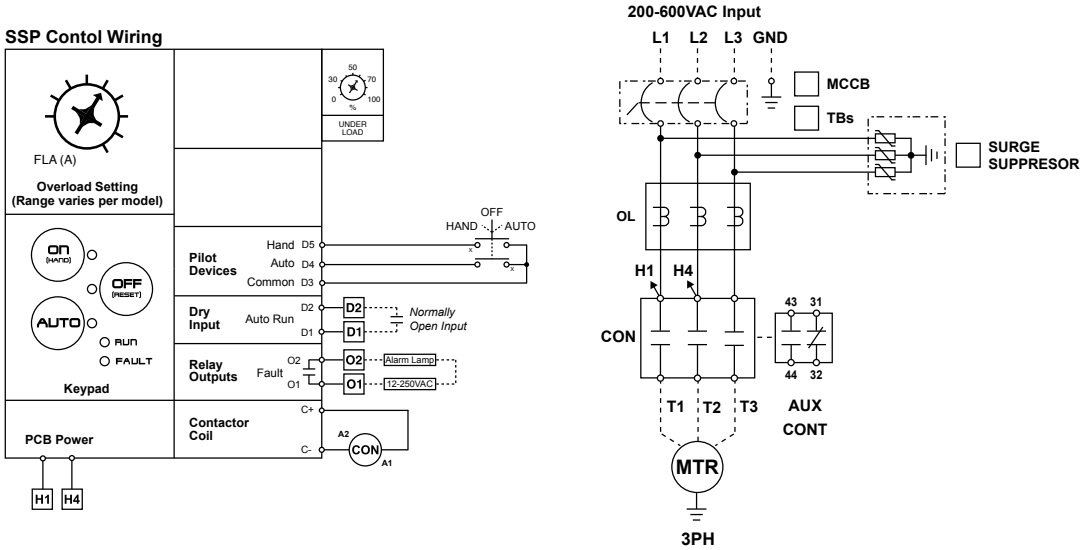


*NOTE: standard wiring schematic shown, actual product wiring may vary depending on options selected. Dashed lines indicate field wiring.*

## SPECIFICATIONS

| | | | |
|---|---|---|---|
| Starter Type | | | |
| Standard or combination (service rated, suitable for use as a service disconnect) | | | |
| NEMA Type 1 or 3R Enclosed | | | |
| User Interface | | | |
| Settings Adjustments | | Internal | |
| Hand.Off.Auto | | NEMA 3R Enclosed - door mounted switch, NEMA 1 Enclosed - Hand/Off/Auto keypad | |
| Standard Control Operations | | | |
| Inputs | Dry Auto Run | N.O. dry contact closure | |
| | Run Timer | Optional - starter will run for a user defined time (1/2-12 hrs.), then return to off until another run command is received | |
| Output | Fault Relay | N.O. 12-240 VAC | |
| Operational | Overload Type | Electronic, I2T thermal trip curve | |
| | Fault Reset | Manual | |
| | Power Fail Modes | Selectable: return to off mode or return to last mode (Hand/Off/Auto) | |
| Environmental | | | |
| Ambient Operating Temp | | -5 °F to 140 °F (-20 °C to 60 °C) | |
| Ambient Storage Temp | | -5 °F to 185 °F (-20 °C to 85 °C) | |
| Relative Humidity | | 5% to 95% non-condensing | |
| Motor Protection | | Adjustment / Description | Default Setting |
| Overload Current Setting Range | | Differs per model | Per SFA |
| Overload Trip Class | | Adjustable Class 10 (Submersible) | Always on |
| Underload | | Adjustable Trip: 0%-100% of FLA | 70% |
| Cycle Fault | | Trip if cycle rate exceeds 20 starts/minute | Always On |
| Stall | | Trips within 0.5 seconds (disabled during startup) | Always On |
| Protection | | Adjustment / Description | Default Setting |
| Current Phase Unbalance | On | Trips within 3 sec. @ 25% current unbalance.<br>*Trip threshold changes to 80% unbalance when switched to off | On |
| Locked Rotor | | Trips within 0.5 seconds | |
| Max Time to Start | | Regardless of FLA or I2T curve, always trip at start if starting current is outside of an acceptable range (in-rush / 5) and still decreasing after 10 seconds. | |

FRANKLIN CONTROL SYSTEMS

# SPS STANDARD PUMP STARTER

50/60 Hz, 1Ø & 3Ø, 120~600 VAC, 1–60 HP; Service-rated circuit breaker disconnect; Adjustable overload with phase loss protection

## RUGGED CONSTRUCTION, DEPENDABLE OPERATION

- Simple and functional control with heavy duty HOA switch
- Powder coated metal Type 3R enclosure available with optional pole mounting straps
- Ample space for adding additional controls

## MAIN CIRCUIT BREAKER DISCONNECT

- Rated for service entrance
- UL 489 circuit breaker provides branch and short circuit protection
- No fuses required, saving time and money
- Lockable handle for safety
- UL listed for use as service equipment

## RELIABLE COMPONENTS FOR LONG LIFE

- 2.5 million contactor electrical cycles at full rated current
- Contactor includes standard 1 N.O. and 1 N.C. auxiliary contacts
- NEMA size rated, available in NEMA sizes 1-5

## THERMAL OVERLOAD MOTOR PROTECTION

- Differential phase failure protection
- Ambient temperature compensated: 41 ºF - 104 ºF (5 ºC to 40 ºC)
- Reset push button on door eliminates the need to access panel interior

## STANDARD CONTROL TRANSFORMER (CPT)

- Multi-tap CPT input accepts all common motor voltages
- Integrated secondary protection—no fuses required
- 120 V control power available for additional field installed devices

## PART NUMBER ANATOMY

**SPS Starter Part Number Anatomy**
**120-460VAC**

Starter Family
Enclosure Type
Contactor NEMA Size

**SPS3R-XX-K-GXX-XX**

Overload Type (Thermal)
Disconnect /Size
Highest Available Overload Setting

| Contactor NEMA Sizes | Disconnect Sizes: Sized Between 175%-225% of Motor FLA | Highest Available Overload Setting* |
|---|---|---|
| S1 | 15, 20, 30, 40, 50 | 9, 13, 18, 22, 32 |
| S2 | 40, 50, 60, 80 | 22, 36, 36, 50 |
| S3 | 80, 100, 125, 150 | 50, 65, 75, 85 |
| S3P | 200 | 100 |

*Highest Available Overload Setting does not coincide with the max SFA that the starter can handle. The max allowable SFA of the starter is determined by a combination of the disconnect size and contactor ratingsratings.

# SPS STANDARD PUMP STARTER - ORDERING & SIZING INFORMATION

## STANDARD PUMP STARTER

Standard Pump Starter (Combination) 120–460 V UL/NEMA 3R Enclosures (Thermal Overload)

| Model No. | UL HP / MAX SF AMPS** | | | | | | | | | | Overload Adjustment Range | Contactor NEMA Size | Wt. (lbs) | Description |
|---|---|---|---|---|---|---|---|---|---|---|---|---|---|---|
| | Single-Phase | | | | Three-Phase Description | | | | | | | | | |
| | 120 V | | 230 V* | | 200 V | | 230 V | | 460 V | | | | | |
| SPS3R-S1-K-G15-9 | 1/3 HP | 8 A | 1 HP | 8 A | 2 HP | 8 A | 2 HP | 8 A | 5 HP | 8 A | 6-9 A | 1 | 44 | N3R SPS, S1, 8A, w/ HOA, TOL, CB Disc., & 50VA CPT |
| SPS3R-S1-K-G20-13 | 1/2 HP | 11 A | 1.5 HP | 11 A | 3 HP | 11 A | 3 HP | 11 A | 7.5 HP | 11 A | 9-13 A | | | N3R SPS, S1, 11A, w/ HOA, TOL, CB Disc., & 50VA CPT |
| SPS3R-S1-K-G30-18 | 1 HP | 17 A | 3 HP | 17 A | - | - | 5 HP | 17 A | 10 HP | 17 A | 12-18 A | | | N3R SPS, S1, 17A, w/ HOA, TOL, CB Disc., & 50VA CPT |
| SPS3R-S1-K-G40-22 | 1.5 HP | 22 A | - | - | 5 HP | 16.7 A | 7.5 HP | 22 A | 15 HP | 22 A | 16-22 A | | | N3R SPS, S1, 22A, w/ HOA, TOL, CB Disc., & 50VA CPT |
| SPS3R-S1-K-G50-32 | 2 HP | 24 A | 5 HP | 28 A | 7.5 HP | 25.3 A | 10 HP | 28 A | 20 HP | 27 A | 22-32 A | | | N3R SPS, S1, 28A, w/ HOA, TOL, CB Disc., & 50VA CPT |
| SPS3R-S2-K-G50-36 | 2 HP | 28 A | 5 HP | 28 A | 7.5 HP | 28 A | 10 HP | 28 A | 20 HP | 28 A | 24-36 A | 2 | 48 | N3R SPS, S2, 28A, w/ HOA, TOL, CB Disc., & 50VA CPT |
| SPS3R-S2-K-G60-36 | 3 HP | 34 A | 5 HP | 34 A | 10 HP | 34 A | 10 HP | 34 A | 25 HP | 34 A | 24-36 A | | | N3R SPS, S2, 34A, w/ HOA, TOL, CB Disc., & 50VA CPT |
| SPS3R-S2-K-G80-50 | - | - | 7.5 HP | 45 A | - | - | 15 HP | 45 A | 30 HP | 45 A | 34-50 A | | | N3R SPS, S2, 45A, w/ HOA, TOL, CB Disc., & 50VA CPT |
| SPS3R-S3-K-G100-65 | 5 HP | 57 A | 10 HP | 57 A | 15 HP | 57 A | 20 HP | 57 A | 40 HP | 57 A | 45-65 A | 3 | 64 | N3R SPS, S3, 57A, w/ HOA, TOL, CB Disc., & 100VA CPT |
| SPS3R-S3-K-G125-75 | 5 HP | 68 A | 15 HP | 68 A | 20 HP | 68 A | 25 HP | 68 A | 50 HP | 68 A | 54-75 A | | | N3R SPS, S3, 68A, w/ HOA, TOL, CB Disc., & 100VA CPT |
| SPS3R-S3-K-G150-85 | 7.5 HP | 80 A | 15 HP | 68 A | 25 HP | 85 A | 30 HP | 85 A | 60 HP | 77 A | 63-85 A | | | N3R SPS, S3, 85A, w/ HOA, TOL, CB Disc., & 100VA CPT |
| SPS3R-S3P-K-G200-100 | 10 HP | 100 A | 20 HP | 88 A | 30 HP | 92 A | - | - | 75 HP | 96 A | 80-100 A | 3+ | 66 | N3R SPS, S3P, 100A, w/ HOA, TOL, CB Disc. & 100VA |

**Must order with option SPS-1PH for single-phase wiring from factory*

*****Use SFA Range or Max. SFA when sizing for submersible motor applications. If an amperage value for SFA is not published on the motor nameplate, consider SFA range to be FLA range.***

## STANDARD PUMP STARTER

Standard Pump Starters (Combination) 575 V UL/NEMA 3R Enclosures (Thermal Overload)

| Model No. | UL HP / MAX SF AMPS** | | Overload Adjustment Range | Contactor NEMA Size | Wt. (lbs) | Description |
|---|---|---|---|---|---|---|
| | Three Phase | | | | | |
| | 575 V | | | | | |
| SPS3R-S1-6K-G20-13 | 10HP | 11A | 9-13A | 1 | 44 | N3R 575V SPS, S1, 11A, w/ HOA, TOL, CB Disc., & 50VA CPT |
| SPS3R-S1-6K-G30-18 | 15HP | 17A | 12-18A | | | N3R 575V SPS, S1, 17A, w/ HOA, TOL, CB Disc., & 50VA CPT |
| SPS3R-S1-6K-G40-25 | 20HP | 22A | 18-25A | | | N3R 575V SPS, S1, 22A, w/ HOA, TOL, CB Disc., & 50VA CPT |
| SPS3R-S1-6K-G50-32 | 25HP | 28A | 22-32A | | | N3R 575V SPS, S1, 28A, w/ HOA, TOL, CB Disc., & 50VA CPT |
| SPS3R-S2-6K-G60-36 | 30HP | 34A | 24-36A | 2 | 48 | N3R 575V SPS, S2, 34A, w/ HOA, TOL, CB Disc., & 50VA CPT |
| SPS3R-S2-6K-G80-50 | 40HP | 45A | 34-50A | | | N3R 575V SPS, S2, 45A, w/ HOA, TOL, CB Disc., & 50VA CPT |
| SPS3R-S3-6K-G100-65 | 50HP | 57A | 45-65A | 3 | 64 | N3R 575V SPS, S3, 57A, w/ HOA, TOL, CB Disc., & 100VA CPT |
| SPS3R-S3-6K-G125-75 | 60HP | 71A | 54-75A | | | N3R 575V SPS, S3, 71A, w/ HOA, TOL, CB Disc., & 100VA CPT |
| SPS3R-S3-6K-G150-85 | 75HP | 77A | 63-85A | | | N3R 575V SPS, S3, 77A, w/ HOA, TOL, CB Disc., & 100VA CPT |

*****Use SFA Range or Max. SFA when sizing for submersible motor applications. If an amperage value for SFA is not published on the motor nameplate, consider SFA range to be FLA range.***

# SPS STANDARD PUMP STARTER - DIMENSIONS

## OPTIONS (FACTORY INSTALLABLE)

| Model No. | Description |
|---|---|
| SPS-24 | 24VAC Control Circuit |
| SPS-3FC | Three Float Switch Input Terminals for Simplex Operation |
| SPS-BCN | Optional Top Mount Alarm Beacon Light, 120VAC |
| SPS-1PH | Factory installed single-phase wiring |
| SPS-BZR | Optional Door Mounted Buzzer, 120VAC w/ Silence Pushbutton |
| SPS-CLK-120V | Optional 7 Day, 24 Hr Programmable Clock |
| SPS-CLK-24V | Optional 7 Day, 24 Hr Programmable Clock SPS-FPL |
| SPS-FPL | Fault Pilot Light |
| SPS-RLY-120VAC | Factory Installed 120VAC Finder Interposing Run Relay |
| SPS-RLY-24VAC-DC | Factory Installed 24VAC/VDC Finder Interposing Run Relay |
| SPS-RPL | Run Pilot Light |
| SPS-SPB | Start Pushbutton |
| SPS-SRG240 | Surge Supressor 208-240VAC, delta power configuration |
| SPS-SRG480 | Surge Supressor 480VAC, delta power configuration |
| SPS-SRG600 | Surge Supressor 600VAC, delta power configuration |

## DIMENSIONS

| Starter | Dimensions (in) | | |
|---|---|---|---|
| | H | W | D |
| SPS3R-S1-K-GXX-X | 22 | 15 | 10 |
| SPS3R-S1-K-GXX-XX | | | |
| SPS3R-S2-K-GXX-XX | | | |
| SPS3R-S3-K-GXXX-XX | | | |
| SPS3R-S3P-K-GXXX-XXX | | | |
| SPS3R-S1-6K-GXX-XX | 32 | 15 | 10 |
| SPS3R-S2-6K-GXX-XX | | | |
| SPS3R-S3-6K-GXXX-XX | | | |

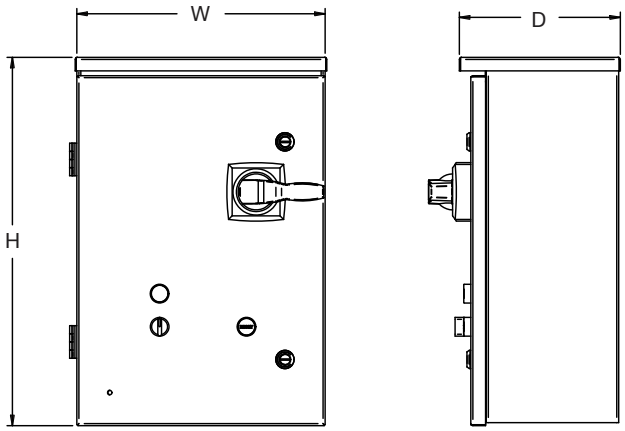

# SPS STANDARD PUMP STARTER - WIRING DIAGRAM & SPECIFICATIONS

## WIRING DIAGRAM

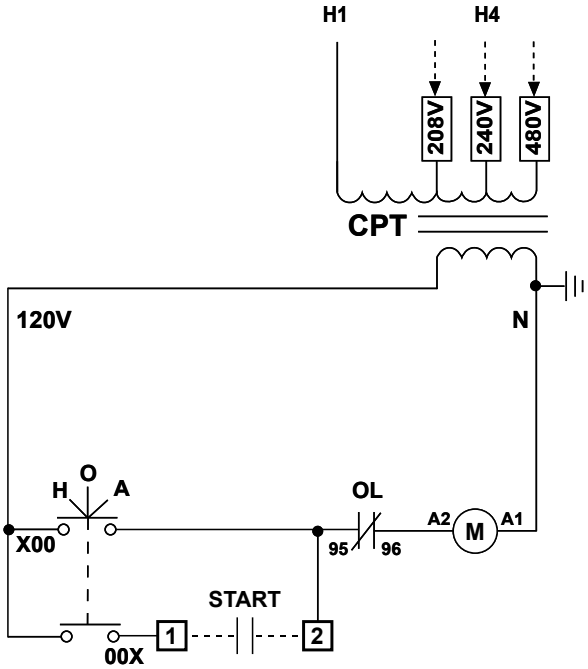


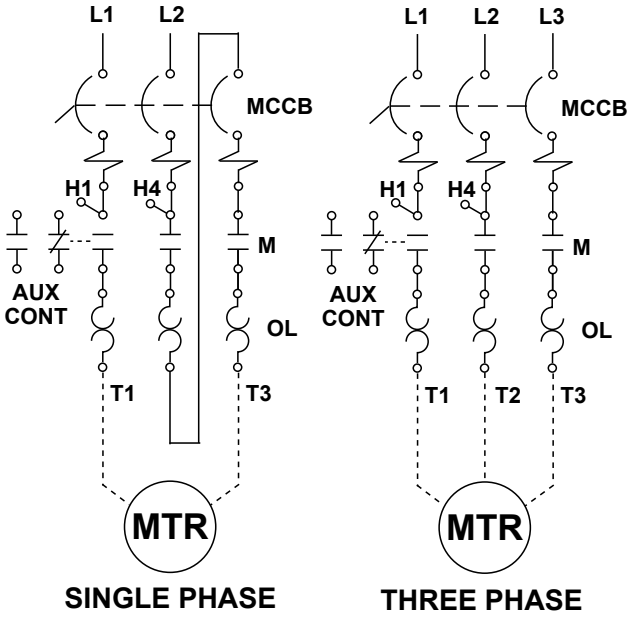


## SPECIFICATIONS

| | |
|---|---|
| **Starter Type** | |
| Standard Pump Starter | |
| Combination, Service Rated | |
| UL Type 3R Enclosure | |
| **User Interface** | |
| HOA Selector Switch | |
| Reset Push Button | |
| **Standard Control Operations** | |
| Auto Run Input | N.O. dry contact closure to energize starter |
| **Environmental** | |
| Ambient Operating Temp | -5 to 140 °F (-20 to 60 °C) |
| Ambient Storage Temp | -5 to 185 °F (-20 to 85 °C) |
| Relative Humidity | 5% to 95% non-condensing |
| **Protective Functions** | |
| Overload Type | Thermal bi-metallic |
| Trip Class | Class 10 |
| Reset | Manual |
| Phase Loss | Differential overload protection |

FRANKLIN CONTROL SYSTEMS

# SPS-RV STANDARD PUMP STARTER REDUCED VOLTAGE

Integrated electronic pump protection overload, a wide range of voltage acceptance (200~600 VAC), and hp-rated contactor bypass.
3Ø, 50/60 Hz, 200~600 VAC, 2~75 hp

## ELECTRONIC PROTECTION & AUTOMATION I/O

- Wide-range, Class 10 electronic overload
- Current phase unbalance protection
- Locked rotor / stall protection
- Cycle fault protection
- Accepts 200-600 VAC directly, true plug and play
- Voltage auto-run input
- Dry contact auto-run input
- Status relay output
- Hand/Off/Auto keypad with LEDs for mode, fault, and run indication

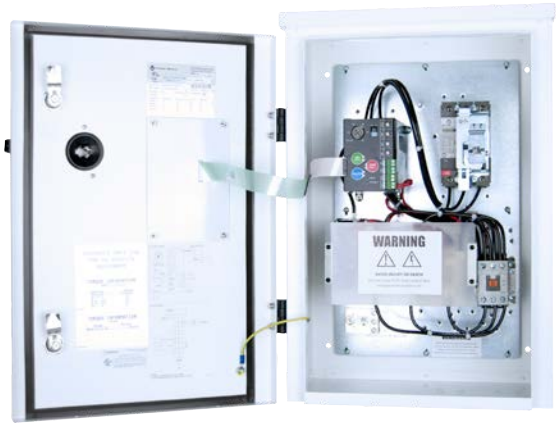


## SOFT STARTER FEATURES

- Full horsepower-rated bypass contactor
- Across-the-line start for emergency situations
- Adjustable current limit, start/stop voltage, and start/stop time
- SCR over-temperature detection
- Shorted SCR detection

## OPTIONAL CIRCUIT BREAKER DISCONNECT*

- UL 489 circuit breaker provides branch and short circuit protection
- No fuses required – saves time and money
- Lockable handle for safety

** Service entrance rated*

## INDUSTRIAL GRADE CONSTRUCTION

- Door mounted HOA keypad
- Housed in an outdoor rated, gasketed, NEMA 3R enclosure
- NEMA rated bypass contactor features 2.5 million electrical cycles at full rated current, nearly twice the life as our competitors*

** These comparisons are based on published marketing information from manufacturers.*

# SPS-RV STANDARD PUMP STARTER REDUCED VOLTAGE - ORDERING & SIZING INFORMATION

## STANDARD PUMP STARTER REDUCED VOLTAGE

3-Phase, 50/60 Hz, 200~600 VAC, NEMA Type 3R Enclosed - Combination Soft Starter. Includes Service Entrance Circuit Breaker Disconnect

| Model No. | 200 V - 460 V SFA Range** (A) | 600 V SFA Range** (A) | 3-PHASE HP (UL) / Max. SFA** | | | | | | | | Contactor NEMA Size |
|---|---|---|---|---|---|---|---|---|---|---|---|
| | | | 200 V | | 230 V | | 460 V | | 600 V | | |
| | | | HP | SFA | HP | SFA | HP | SFA | HP | SFA | |
| SPS3R-RV-S1-J-G15 | 6~8 | 6~8 | 2 | 8 | 2 | 8 | 5 | 8 | 5 | 8 | 1 |
| SPS3R-RV-S1-J-G20 | 8~11 | 8~11 | 3 | 11 | 3 | 11 | 7.5 | 11 | 10 | 11 | |
| SPS3R-RV-S1-J-G30 | 11~17 | 11~17 | 3 | 17 | 5 | 17 | 10 | 17 | 15 | 17 | |
| SPS3R-RV-S1-J-G40 | 16~22 | 16~22 | 5 | 22 | 7.5 | 22 | 15 | 22 | 20 | 22 | |
| SPS3R-RV-S1P-J-G50 | 20~28 | 20~28 | 7.5 | 28 | 10 | 28 | 20 | 28 | 25 | 28 | 1+ |
| SPS3R-RV-S1P-J-G60 | 24~34 | 24~32 | 10 | 34 | 10 | 34 | 25 | 34 | 30 | 32 | |
| SPS3R-RV-S2-J-G80 | 32~45 | 32~45 | 10 | 45 | 15 | 45 | 30 | 45 | 40 | 45 | 2 |
| SPS3R-RV-S3-J-G100 | 40~57 | 40~57 | 15 | 57 | 20 | 57 | 40 | 57 | 50 | 57 | 3 |
| SPS3R-RV-S3-J-G125 | 50~71 | 50~71 | 20 | 71 | 25 | 71 | 50 | 71 | 60 | 71 | |
| SPS3R-RV-S3P-J-G150 | 60~85 | 60~77 | 25 | 85 | 30 | 85 | 60 | 85 | 75 | 77 | 3+ |

*****Use SFA Range or Max. SFA when sizing for submersible motor applications. If an amperage value for SFA is not published on the motor nameplate, consider SFA range to be FLA range.***

## STANDARD PUMP STARTER REDUCED VOLTAGE

3-Phase, 50/60 Hz, 200~600 VAC, NEMA Type 3R Enclosed - Standard Soft Starter. Disconnect not Included

| Model No. | 200 V - 460 V SFA Range** (A) | 600 V SFA Range** (A) | 3-PHASE HP (UL) / Max. SFA** | | | | | | | | Contactor NEMA Size |
|---|---|---|---|---|---|---|---|---|---|---|---|
| | | | 200 V | | 230 V | | 460 V | | 600 V | | |
| | | | HP | SFA | HP | SFA | HP | SFA | HP | SFA | |
| SPS3R-RV-S00-J | 1~DPV* | 1~9 | 2 | 7.8 | 2 | 9 | 5 | 7.6 | 7.5 | 9 | 00 |
| SPS3R-RV-S0-J | 6~DPV* | 6~17 | 5 | 17.5 | 5 | 18 | 10 | 14 | 15 | 17 | 0 |
| SPS3R-RV-S1-J | 10~DPV* | 10~27 | 7.5 | 25.3 | 10 | 28 | 20 | 27 | 25 | 27 | 1 |
| SPS3R-RV-S1P-J | 20~40 | 20~32 | 10 | 40 | 10 | 40 | 30 | 40 | 30 | 32 | 1+ |
| SPS3R-RV-S2-J | 30~50 | 30~50 | 15 | 50 | 15 | 50 | 30 | 50 | 40 | 50 | 2 |
| SPS3R-RV-S3P-J | 45~85 | 45~77 | 25 | 85 | 30 | 85 | 60 | 85 | 75 | 77 | 3+ |

**DPV = Differs per voltage*

*****Use SFA Range or Max. SFA when sizing for submersible motor applications. If an amperage value for SFA is not published on the motor nameplate, consider SFA range to be FLA range.***

## OPTIONS (FACTORY INSTALLABLE)

| Model No. | Description |
|---|---|
| SPS-SRG240 | Surge Suppressor, 200/230 V |
| SPS-SRG480 | Surge Suppressor, 460 V |
| SPS-SRG600 | Surge Suppressor, 600 V |

FRANKLIN CONTROL SYSTEMS

# SPS-RV STANDARD PUMP STARTER REDUCED VOLTAGE - DIMENSIONS & WIRING DIAGRAM

## DIMENSIONS

| Combination Soft Starter | Dimensions (in) | | |
|---|---|---|---|
| | H | W | D |
| SPS3R-RV-S1-J-GXX | 22 | 15 | 10 |
| SPS3R-RV-S1P-J-GXX | | | |
| SPS3R-RV-S2-J-GXX | | | |
| SPS3R-RV-S3-J-GXXX | 32 | 15 | 10 |
| SPS3R-RV-S3P-J-GXXX | | | |
| **Standard Soft Starter** | **H** | **W** | **D** |
| SPS3R-RV-S00-J | 22 | 15 | 10 |
| SPS3R-RV-S0-J | | | |
| SPS3R-RV-S1-J | | | |
| SPS3R-RV-S1P-J | | | |
| SPS3R-RV-S2-J | | | |
| SPS3R-RV-S3P-J | 32 | 15 | 10 |

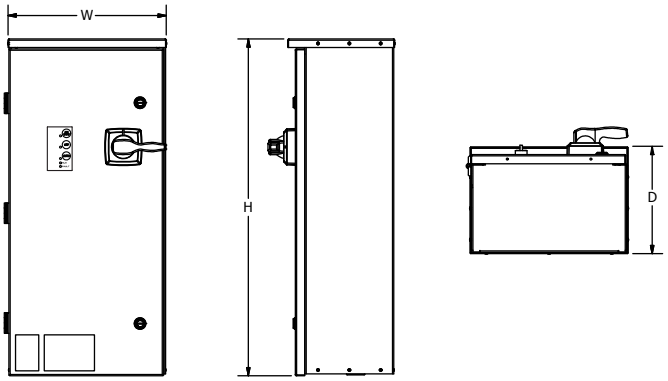


## WIRING DIAGRAM

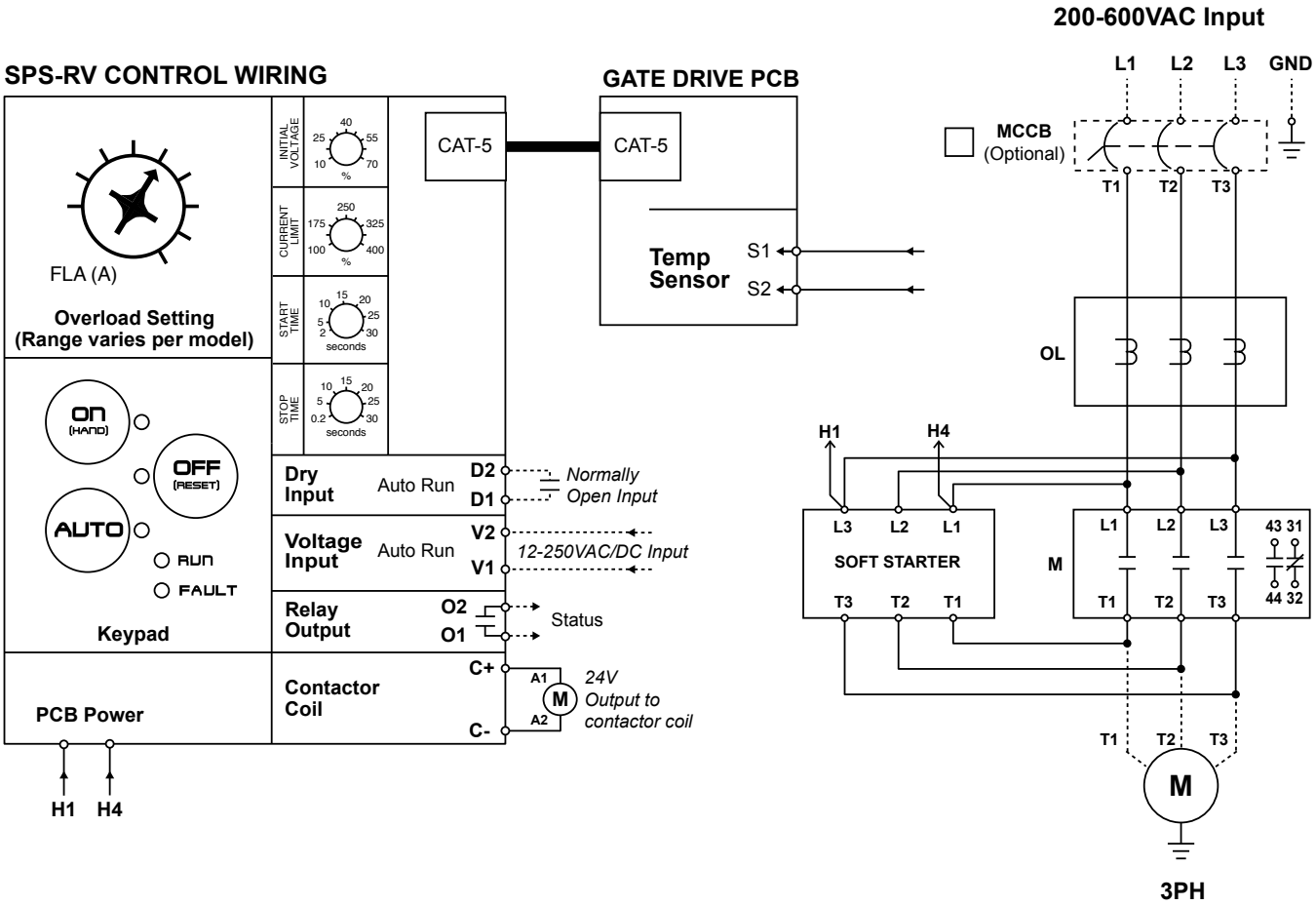


*NOTE: standard wiring schematic shown, actual product wiring may vary depending on options selected. Dashed lines indicate field wiring.*

# SPS-RV STANDARD PUMP STARTER REDUCED VOLTAGE - SPECIFICATIONS

## SPECIFICATIONS

| Soft Starter Type | | |
|---|---|---|
| Standard or combination (service rated, suitable for use as a service disconnect) | | |
| NEMA Type 3R Enclosed | | |
| User Interface | | |
| Settings Adjustments | | Internal |
| Hand/Off/Auto | | Door mounted keypad |
| Standard Control Operations | | |
| Inputs | Voltage Auto | Accepts 12-250 VAC/DC. Applying voltage will send a run command to the starter when in auto mode. |
| | Dry Contact Auto | Normally open dry contact. When closed, the starter will be commanded to run when in auto mode. |
| Output | Status Relay | Normally open relay contact, 0.3A @ 125 VAC, 1A @ 24 VAC |
| Operational | Overload Type | Electronic, I2T trip curve |
| | Power Fail | Restart in last mode (Hand/Off/Auto) with no delay (default) |
| | Fault Reset | Adjustable: manual (default) or automatic |
| | Starts | 6/hour, 20 seconds max. start time @ 400% FLA, 30 seconds max. start time @ 300% FLA |
| Environmental | | |
| Ambient Operating Temp | | -5 °F to 140 °F (-20 °C to 60 °C) |
| Ambient Storage Temp | | -5 °F to 185 °F (-20 °C to 85 °C) |
| Relative Humidity | | 5% to 95% non-condensing |

| Motor / Soft Starter Protection | Adjustment / Description | Default Setting |
|---|---|---|
| Overload Current Setting Range | Differs per model | Per SFA |
| Overload Trip Class | 10 | 10 |
| Cycle Fault | Always on: trip if cycle rate exceeds 20 starts/minute | On |
| Current Phase Unbalance | Always on: trips in the event of a current phase unbalance greater than 50% | On |
| Locked Rotor / Stall | Always on: trips within 0.5 seconds | On |
| Shorted SCR | Always on: trips upon detection of a shorted SCR or no motor | On |
| Open SCR | Always on: trips if no current is detected during start-up or bypass | On |
| SCR Over-Temperature | Always on: trips if the SCR temperature reaches 125 °C | On |
| Across-the-Line Start | On/Off: allows the user to start the motor across-the-line | Off |

FRANKLIN CONTROL SYSTEMS

# STARTER COMPARISON CHART

## SMS, SSP, AND SPS

| | SMS SubMonitor Starter | SSP SMARTSTART™ Pump Starter | SPS Standard Pump Starter |
|---|---|---|---|
| Drive / Page | PG. 5 | PG. 15 | PG. 19 |
| Description | SubMonitor protection includes over/underload, cycle fault, and more | An incredible value; Advanced start-up protection features, including over/underload protection | Thermal overload starter, simple control with rugged design |
| User Interface | Hand/Off/Auto switch | Hand/Off/Auto switch | Hand/Off/Auto switch |
| Overload Type | Wide range electronic overload (Class 10) | Wide range electronic overload (Class 10) | Class 10, thermal bi-metallic |
| Motor Protection | Overload | Overload | Overload |
| | Under power (dry run) | Underload | Phase loss |
| | Over power | Current phase unbalance | - |
| | Under voltage | Cycle fault | - |
| | Over voltage | - | - |
| | Phase loss | - | - |
| | Cycle fault | Stall/locked rotor | - |
| | Current phase unbalance | - | - |
| | Locked rotor | Maximum time to start | - |
| | Maximum time to start | - | - |
| | Out of calibration | - | - |
| | Temperature sensor | - | - |
| | - | - | - |
| Inputs / Outputs | Dry contact auto-run input | Dry contact auto-run input | None standard |
| | Fault relay output | Fault relay output | - |
| | - | - | - |
| | - | - | - |
| | - | - | - |
| Options | Surge suppression | Surge suppression | Auto-run 24 V or 120 V wet input |
| | Pilot lights (run and fault) | Pilot lights (run and fault) | Surge suppression |
| | Digital hour meter | Digital hour meter | Fault pilot light |
| | - | - | Float switch inputs |
| | - | - | - |

# STARTER COMPARISON CHART

## IPS-RV AND SPS-RV

| | IPS-RV Intelligent Pump Soft Starter | SPS-RV Standard Pump Soft Starter |
|---|---|---|
| Drive / Page | PG. 9 | 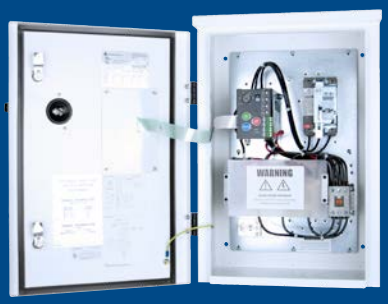 PG. 23 |
| Description | The world's most intelligent pump soft starter with advanced protection and automation features, Modbus communications, and more | Soft-starting capabilities in a more basic package, the SPS-RV has a wide range electronic overload and excellent protective features |
| User Interface | Hand/Off/Auto switch | Hand/Off/Auto keypad with integrated LEDs for mode/fault/run indication |
| Overload Type | Wide range electronic overload with selectable trip class (5-30) | Wide range electronic overload (Class 10) |
| Motor Protection | Overload | Overload |
| | Under power | - |
| | Current phase unbalance | Current phase unbalance |
| | Cycle fault | Cycle fault |
| | Over/under voltage | - |
| | - | - |
| | Stall/locked rotor | Stall/locked rotor |
| | Voltage phase unbalance | - |
| | Voltage phase loss | - |
| | Reverse phase | - |
| | Ground fault (UL1053) | - |
| Inputs / Outputs | Dry contact auto-run input | Dry contact auto-run input |
| | Fault relay output | |
| | Status relay output | Status relay output |
| | Voltage auto-run input | Voltage auto-run input |
| | Voltage emergency shutdown input | - |
| | Programmable contacts for float control | - |
| Communications | Modbus RTU | - |
| Additional Features | SCR over-temperature trip | SCR over-temperature trip |
| | Shorted SCR trip | Shorted SCR trip |
| | Open SCR trip | Open SCR trip |
| | Across-the-Line start | Across-the-Line start |
| Options | Surge suppression | Surge suppression |
| | Pilot lights (run and fault) | - |

# P-SERIES VFD (VARIABLE FREQUENCY DRIVE)

## VARIABLE SPEED CONTROL IS JUST THE BEGINNING

Everyone knows variable frequency drives save you money by varying motor speed to match demand. Our automatic energy savings mode minimizes losses by optimizing the output power for higher efficiency. Under low load conditions, Sleep Mode deactivates the drive and its output – then awakens and reactivates output when demand rises to unlock additional savings. It also extends the life of the equipment.

## STANDARD FEATURES (ENCLOSED DRIVES)

- Selectable V/F, sensorless vector control
- For outdoor and/or wash down applications
- Rainproof NEMA 3R enclosure reduces thermal absorption with white, solar reflective finish and filtered cooling fans
- Standard VFD package is rated for 110 °F ambient temperature in non-direct sunlight.
- Additional application-specific protective devices included (i.e. line reactors, load reactors, and dV/dT filter)
- Franklin FastApp™ Firmware
  - Quick and easy set-up for submersible and centrifugal packages
  - Display uses pump specific terminology
- Pump Specific Protection and Features
  - Broken pipe detection
  - Dry-well/Underload detection with well refill timer
  - Pipe fill (Pre-PID) - VFD ramps up to Pre-PID frequency and fills pipes without pressurizing system and hydraulic surges
  - Sleep mode and wake up functions with pressure boost
  - Automatic energy savings mode
  - Flying start protection prevents trips, rough starts, and drive damage from regenerative power due to heavy inertia rotation
- Custom Packages Available
  - Alternative enclosure options (NEMA 1, NEMA 12, NEMA 4X)
  - Multi-motor/pump packages
  - Customizable control options

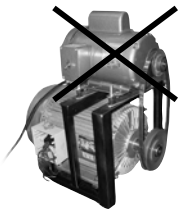

NO NEED FOR
ROTO-PHASE CONVERTERS!

# P-SERIES VFD (VARIABLE FREQUENCY DRIVE)

## EASY START-UP WITH FASTAPP PROGRAMMING

Franklin Control Systems drive packages come pre-programmed for submersible or surface motors with pre-set parameters based on your specific application. To watch a start-up video of the basic wiring and programming of a P-Series VFD for a submersible application, scan the QR code below or go to www.franklin-controls.com.

## ANY JOB, ANY ENVIRONMENT

From corrosive environments to long motor leads to soaring temperatures, we can engineer a panel to fit nearly any application in any location. Our standard packages usually fit the bill, but if your job poses unique challenges, our engineers are up to the task.

## 1- TO 3-PHASE CONVERSION

Franklin has solutions for 230 V or 460 V, 1Ø to 3Ø conversion - no need for a roto-phase converter and pump starter combo. By doubling the hp of your motor to size your VFD (20 hp motor = 40 hp VFD), the conversion is complete. All you need is one Franklin VFD.

## NEW & IMPROVED FEATURES

- Alternating Lead-Lag Control - Two motors, no external PLC needed
- Dual Demand Control - Drive senses when to switch to second set point on applications feeding two systems
- Adaptive Dry Well Protection - Automatic determination of well recovery time
- Water Lubrication Timer
- Auxiliary Timer
- No Flow Protection
- Screen Cleaning
- Backspin Timer
- Pipe Leak (Cycling Protection)
- Speed Limit by VFD Temperature (to avoid overheat nuisance trips)
- Motor Overheat Protection
- Relay Activated by Analog Level
- Speed Limit by Well Water Level
- Two-transducer redundancy

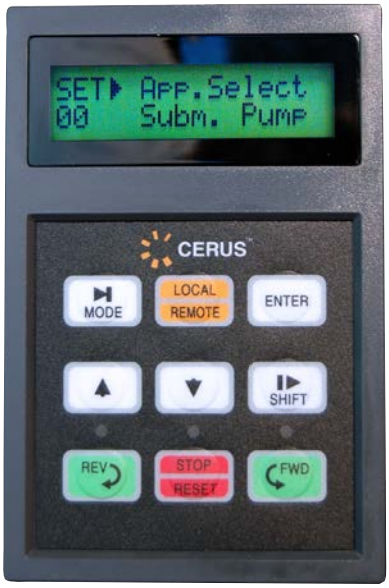


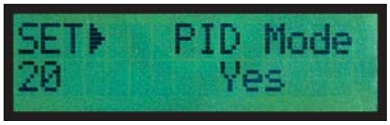

## PART NUMBER ANATOMY

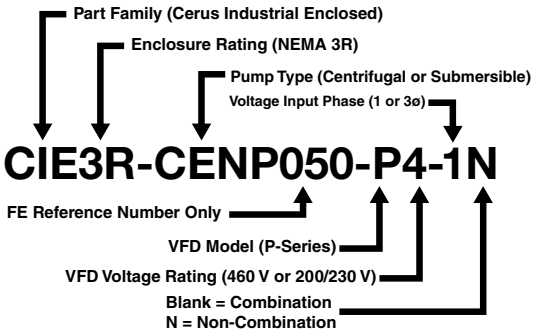


*Scan for start-up video*

# P-SERIES VFD ENCLOSED - NEMA 1 LARGE DRIVE

## SLIM SPACE-SAVING DESIGN

1. P-Series Pump Optimized VFD
   - 32-character keypad and pre-configured parameters for all common pump applications
2. Indoor NEMA 1 enclosure
3. Disconnect provides short circuit protection and eliminates call backs due to fuse issues
4. Line reactor enhances protection from transient surges and provides a degree of harmonic mitigation
5. Output filter for long motor leads (standard in submersible packages only)

# P-SERIES VFD ENCLOSED - NEMA 3R LARGE DRIVE

## DESIGNED TO WITHSTAND HARSH ENVIRONMENTS

1. P-Series Pump Optimized VFD
   - 32-character keypad and pre-configured parameters for all common pump applications
2. Rugged outdoor NEMA 3R enclosure with cooling fans and filtration
3. Circuit breaker disconnect eliminates call backs due to fuse issues
4. Line reactor enhances protection from transient surges and provides a degree of harmonic mitigation
5. Control power transformer with breaker protection
6. Output filter for long motor leads (standard in submersible packages only)
7. Eye-bolt lift kit comes standard

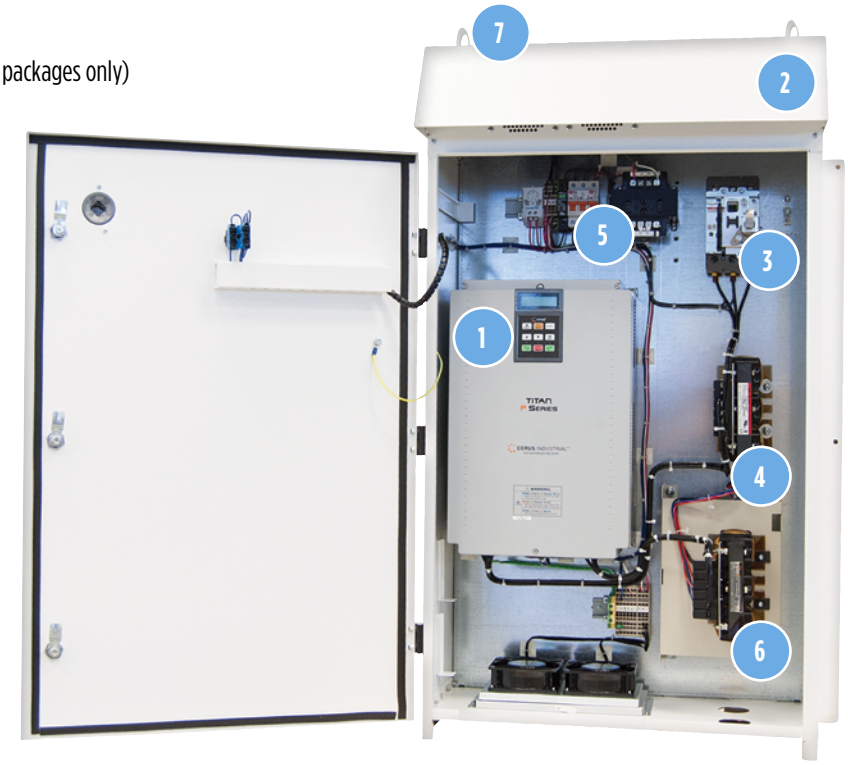

FRANKLIN CONTROL SYSTEMS

# P-SERIES VFD ENCLOSED - ORDERING & SIZING INFORMATION

## NEMA 1 LARGE DRIVE SUBMERSIBLES (COMBINATION)

Single-Phase & Three-Phase (200-230 V, 480 V), UL/NEMA 3R Enclosure

| Voltage | HP | Max Amps | Model No. | Description |
|---|---|---|---|---|
| 230 V, 1-Phase | 1 | 5.5 | CIE1-SUBP001-P2-1 | NEMA 1, 1 HP 230 V, 1-PH, Upsized VFD, MCP, LR |
| | 2 | 8 | CIE1-SUBP002-P2-1 | NEMA 1, 2 HP 230 V, 1-PH, Upsized VFD, MCP, LR |
| | 3 | 12 | CIE1-SUBP003-P2-1 | NEMA 1, 3 HP 230 V, 1-PH, Upsized VFD, MCP, LR |
| | 5 | 17.6 | CIE1-SUBP005-P2-1 | NEMA 1, 5 HP 230 V, 1-PH, Upsized VFD, MCP, LR |
| | 7.5 | 25 | CIE1-SUBP007-P2-1 | NEMA 1, 7.5 HP 230 V, 1-PH, Upsized VFD, MCP, LR |
| | 10 | 33 | CIE1-SUBP010-P2-1 | NEMA 1, 10 HP 230 V, 1-PH, Upsized VFD, MCP, LR |
| | 15 | 48.6 | CIE1-SUBP015-P2-1 | NEMA 1, 15 HP 230 V, 1-PH, Upsized VFD, MCP, LR |
| | 20 | 64 | CIE1-SUBP020-P2-1 | NEMA 1, 20 HP 230 V, 1-PH, Upsized VFD, MCP, LR |
| 230 V, 3-Phase | 2 | 8 | CIE1-SUBP002-P2-3 | NEMA 1, 2 HP 230 V, 3-PH, Upsized VFD, MCP, LR |
| | 3 | 12 | CIE1-SUBP003-P2-3 | NEMA 1, 3 HP 230 V, 3-PH, Upsized VFD, MCP, LR |
| | 5 | 19 | CIE1-SUBP005-P2-3 | NEMA 1, 5 HP 230 V, 3-PH, Upsized VFD, MCP, LR |
| | 7.5 | 30 | CIE1-SUBP007-P2-3 | NEMA 1, 7.5 HP 230 V, 3-PH, Upsized VFD, MCP, LR |
| | 10 | 40 | CIE1-SUBP010-P2-3 | NEMA 1, 10 HP 230 V, 3-PH, Upsized VFD, MCP, LR |
| | 15 | 55 | CIE1-SUBP015-P2-3 | NEMA 1, 15 HP 230 V, 3-PH, Upsized VFD, MCP, LR |
| | 20 | 74 | CIE1-SUBP020-P2-3 | NEMA 1, 20 HP 230 V, 3-PH, Upsized VFD, MCP, LR |
| | 25 | 85 | CIE1-SUBP025-P2-3 | NEMA 1, 25 HP 230 V, 3-PH, Upsized VFD, MCP, LR |
| | 30 | 100 | CIE1-SUBP030-P2-3 | NEMA 1, 30 HP 230 V, 3-PH, Upsized VFD, MCP, LR |
| 460 V, 1-Phase | 2 | 4 | CIE1-SUBP002-P4-1 | NEMA 1, 2 HP 460 V, 1-PH, Upsized VFD, MCP, LR, OF |
| | 3 | 5.3 | CIE1-SUBP003-P4-1 | NEMA 1, 3 HP 460 V, 1-PH, Upsized VFD, MCP, LR, OF |
| | 5 | 8.8 | CIE1-SUBP005-P4-1 | NEMA 1, 5 HP 460 V, 1-PH, Upsized VFD, MCP, LR, OF |
| | 7.5 | 13.2 | CIE1-SUBP007-P4-1 | NEMA 1, 7.5 HP 460 V, 1-PH, Upsized VFD, MCP, LR, OF |
| | 10 | 16.5 | CIE1-SUBP010-P4-1 | NEMA 1, 10 HP 460 V, 1-PH, Upsized VFD, MCP, LR, OF |
| | 15 | 24.5 | CIE1-SUBP015-P4-1 | NEMA 1, 15 HP 460 V, 1-PH, Upsized VFD, MCP, LR, OF |
| | 20 | 30.3 | CIE1-SUBP020-P4-1 | NEMA 1, 20 HP 460 V, 1-PH, Upsized VFD, MCP, LR, OF |
| | 25 | 35.7 | CIE1-SUBP025-P4-1 | NEMA 1, 25 HP 460 V, 1-PH, Upsized VFD, MCP, LR, OF |
| | 30 | 42.3 | CIE1-SUBP030-P4-1 | NEMA 1, 30 HP 460 V, 1-PH, Upsized VFD, MCP, LR, OF |
| | 40 | 60.4 | CIE1-SUBP040-P4-1 | NEMA 1, 40 HP 460 V, 1-PH, Upsized VFD, MCP, LR, OF |
| | 50 | 80 | CIE1-SUBP050-P4-1 | NEMA 1, 50 HP 460 V, 1-PH, Upsized VFD, MCP, LR, OF |
| | 60 | 91 | CIE1-SUBP060-P4-1 | NEMA 1, 60 HP 460 V, 1-PH, Upsized VFD, MCP, LR, OF |
| 460 V, 3-Phase | 1 | 3 | CIE1-SUBP001-P4-3 | NEMA 1, 1 HP 460 V, 3-PH, Upsized VFD, MCP, LR, OF |
| | 2 | 4 | CIE1-SUBP002-P4-3 | NEMA 1, 2 HP 460 V, 3-PH, Upsized VFD, MCP, LR, OF |
| | 3 | 6 | CIE1-SUBP003-P4-3 | NEMA 1, 3 HP 460 V, 3-PH, Upsized VFD, MCP, LR, OF |
| | 5 | 9.6 | CIE1-SUBP005-P4-3 | NEMA 1, 5 HP 460 V, 3-PH, Upsized VFD, MCP, LR, OF |
| | 7.5 | 13 | CIE1-SUBP007-P4-3 | NEMA1, 7.5 HP 460 V, 3-PH, Upsized VFD, MCP, LR, OF |
| | 10 | 17 | CIE1-SUBP010-P4-3 | NEMA 1, 10 HP 460 V, 3-PH, Upsized VFD, MCP, LR, OF |
| | 15 | 25 | CIE1-SUBP015-P4-3 | NEMA 1, 15 HP 460 V, 3-PH, Upsized VFD, MCP, LR, OF |
| | 20 | 30 | CIE1-SUBP020-P4-3 | NEMA 1, 20 HP 460 V, 3-PH, Upsized VFD, MCP, LR, OF |
| | 25 | 40 | CIE1-SUBP025-P4-3 | NEMA 1, 25 HP 460 V, 3-PH, Upsized VFD, MCP, LR, OF |
| | 30 | 45 | CIE1-SUBP030-P4-3 | NEMA 1, 30 HP 460 V, 3-PH, Upsized VFD, MCP, LR, OF |
| | 40 | 63 | CIE1-SUBP040-P4-3 | NEMA 1, 40 HP 460 V, 3-PH, Upsized VFD, MCP, LR, OF |
| | 50 | 77 | CIE1-SUBP050-P4-3 | NEMA 1, 50 HP 460 V, 3-PH, Upsized VFD, MCP, LR, OF |
| | 60 | 100 | CIE1-SUBP060-P4-3 | NEMA 1, 60 HP 460 V, 3-PH, Upsized VFD, MCP, LR, OF |
| | 75 | 110 | CIE1-SUBP075-P4-3 | NEMA 1, 75 HP 460 V, 3-PH, Upsized VFD, MCP, LR, OF |
| | 100 | 150 | CIE1-SUBP100-P4-3 | NEMA 1, 100 HP 460 V, 3-PH, Upsized VFD, MCP, LR, OF |

# P-SERIES VFD ENCLOSED - ORDERING & SIZING INFORMATION

## NEMA 1 LARGE DRIVE SURFACE (COMBINATION)

Single-Phase & Three-Phase (200-230 V, 480 V), UL/NEMA 3R Enclosure

| Voltage | HP | Max Amps | Model No. | Description |
|---|---|---|---|---|
| 230 V, 1-Phase | 1 | 5.5 | CIE1-CENP001-P2-1 | NEMA 1, 1 HP 230 V, 1-PH, Upsized VFD, MCP, LR |
| | 2 | 8.1 | CIE1-CENP002-P2-1 | NEMA 1, 2 HP 230 V, 1-PH, Upsized VFD, MCP, LR |
| | 3 | 10.5 | CIE1-CENP003-P2-1 | NEMA 1, 3 HP 230 V, 1-PH, Upsized VFD, MCP, LR |
| | 5 | 17.6 | CIE1-CENP005-P2-1 | NEMA 1, 5 HP 230 V, 1-PH, Upsized VFD, MCP, LR |
| | 7.5 | 25 | CIE1-CENP007-P2-1 | NEMA 1, 7.5 HP 230 V, 1-PH, Upsized VFD, MCP, LR |
| | 10 | 33 | CIE1-CENP010-P2-1 | NEMA 1, 10 HP 230 V, 1-PH, Upsized VFD, MCP, LR |
| | 15 | 48 | CIE1-CENP015-P2-1 | NEMA 1, 15 HP 230 V, 1-PH, Upsized VFD, MCP, LR |
| | 20 | 63 | CIE1-CENP020-P2-1 | NEMA 1, 20 HP 230 V, 1-PH, Upsized VFD, MCP, LR |
| 230 V, 3-Phase | 2 | 10 | CIE1-CENP002-P2-3 | NEMA 1, 2 HP 230 V, 3-PH, Upsized VFD, MCP, LR |
| | 3 | 12 | CIE1-CENP003-P2-3 | NEMA 1, 3 HP 230 V, 3-PH, Upsized VFD, MCP, LR |
| | 5 | 17 | CIE1-CENP005-P2-3 | NEMA 1, 5 HP 230 V, 3-PH, Upsized VFD, MCP, LR |
| | 7.5 | 24 | CIE1-CENP007-P2-3 | NEMA 1, 7.5 HP 230 V, 3-PH, Upsized VFD, MCP, LR |
| | 10 | 32 | CIE1-CENP010-P2-3 | NEMA 1, 10 HP 230 V, 3-PH, Upsized VFD, MCP, LR |
| | 15 | 46 | CIE1-CENP015-P2-3 | NEMA 1, 15 HP 230 V, 3-PH, Upsized VFD, MCP, LR |
| | 20 | 60 | CIE1-CENP020-P2-3 | NEMA 1, 20 HP 230 V, 3-PH, Upsized VFD, MCP, LR |
| | 25 | 74 | CIE1-CENP025-P2-3 | NEMA 1, 25 HP 230 V, 3-PH, Upsized VFD, MCP, LR |
| | 30 | 88 | CIE1-CENP030-P2-3 | NEMA 1, 30 HP 230 V, 3-PH, Upsized VFD, MCP, LR |
| | 40 | 115 | CIE1-CENP040-P2-3 | NEMA 1, 40 HP 230 V, 3-PH, Upsized VFD, MCP, LR |
| 460 V, 1-Phase | 2 | 4.4 | CIE1-CENP002-P4-1 | NEMA 1, 2 HP 460 V, 1-PH, Upsized VFD, MCP, LR |
| | 3 | 5.3 | CIE1-CENP003-P4-1 | NEMA 1, 3 HP 460 V, 1-PH, Upsized VFD, MCP, LR |
| | 5 | 7.7 | CIE1-CENP005-P4-1 | NEMA 1, 5 HP 460 V, 1-PH, Upsized VFD, MCP, LR |
| | 7.5 | 12 | CIE1-CENP007-P4-1 | NEMA 1, 7.5 HP 460 V, 1-PH, Upsized VFD, MCP, LR |
| | 10 | 16 | CIE1-CENP010-P4-1 | NEMA 1, 10 HP 460 V, 1-PH, Upsized VFD, MCP, LR |
| | 15 | 24 | CIE1-CENP015-P4-1 | NEMA 1, 15 HP 460 V, 1-PH, Upsized VFD, MCP, LR |
| | 20 | 28.7 | CIE1-CENP020-P4-1 | NEMA 1, 20 HP 460 V, 1-PH, Upsized VFD, MCP, LR |
| | 25 | 35.8 | CIE1-CENP025-P4-1 | NEMA 1, 25 HP 460 V, 1-PH, Upsized VFD, MCP, LR |
| | 30 | 42.3 | CIE1-CENP030-P4-1 | NEMA 1, 30 HP 460 V, 1-PH, Upsized VFD, MCP, LR |
| | 40 | 55 | CIE1-CENP040-P4-1 | NEMA 1, 40 HP 460 V, 1-PH, Upsized VFD, MCP, LR |
| | 50 | 71.4 | CIE1-CENP050-P4-1 | NEMA 1, 50 HP 460 V, 1-PH, Upsized VFD, MCP, LR |
| | 60 | 82.5 | CIE1-CENP060-P4-1 | NEMA 1, 60 HP 460 V, 1-PH, Upsized VFD, MCP, LR |
| 460 V, 3-Phase | 2 | 4 | CIE1-CENP002-P4-3 | NEMA 1, 2 HP 460 V, 3-PH, Upsized VFD, MCP, LR |
| | 3 | 6 | CIE1-CENP003-P4-3 | NEMA 1, 3 HP 460 V, 3-PH, Upsized VFD, MCP, LR |
| | 5 | 9.6 | CIE1-CENP005-P4-3 | NEMA 1, 5 HP 460 V, 3-PH, Upsized VFD, MCP, LR |
| | 7.5 | 13 | CIE1-CENP007-P4-3 | NEMA 1, 7.5 HP 460 V, 3-PH, Upsized VFD, MCP, LR |
| | 10 | 14 | CIE1-CENP010-P4-3 | NEMA 1, 10 HP 460 V, 3-PH, Upsized VFD, MCP, LR |
| | 15 | 24 | CIE1-CENP015-P4-3 | NEMA 1, 15 HP 460 V, 3-PH, Upsized VFD, MCP, LR |
| | 20 | 30 | CIE1-CENP020-P4-3 | NEMA 1, 20 HP 460 V, 3-PH, Upsized VFD, MCP, LR |
| | 25 | 39 | CIE1-CENP025-P4-3 | NEMA 1, 25 HP 460 V, 3-PH, Upsized VFD, MCP, LR |
| | 30 | 45 | CIE1-CENP030-P4-3 | NEMA 1, 30 HP 460 V, 3-PH, Upsized VFD, MCP, LR |
| | 40 | 55 | CIE1-CENP040-P4-3 | NEMA 1, 40 HP 460 V, 3-PH, Upsized VFD, MCP, LR |
| | 50 | 65 | CIE1-CENP050-P4-3 | NEMA 1, 50 HP 460 V, 3-PH, Upsized VFD, MCP, LR |
| | 60 | 77 | CIE1-CENP060-P4-3 | NEMA 1, 60 HP 460 V, 3-PH, Upsized VFD, MCP, LR |
| | 75 | 100 | CIE1-CENP075-P4-3 | NEMA 1, 75 HP 460 V, 3-PH, Upsized VFD, MCP, LR |
| | 100 | 130 | CIE1-CENP100-P4-3 | NEMA 1, 100 HP 460 V, 3-PH, Upsized VFD, MCP, LR |
| | 125 | 165 | CIE1-CENP125-P4-3 | NEMA 1, 125 HP 460 V, 3-PH, Upsized VFD, MCP, LR |

FRANKLIN CONTROL SYSTEMS

# P-SERIES VFD ENCLOSED - ORDERING & SIZING INFORMATION

## NEMA 3R LARGE DRIVE SUBMERSIBLES (COMBINATION)

Single-Phase & Three-Phase (200-230 V, 480 V), UL/NEMA 3R Enclosure

| Voltage | HP | Max Amps | Model No. | Description |
|---|---|---|---|---|
| 200-230 V, 1-Phase | 3 | 11 | CIE3R-SUBP003-P2-1 | N3R, 3 HP, 230 V, 1-PH Enclosed VFD, MCCB, LR |
| | 5 | 16 | CIE3R-SUBP005-P2-1 | N3R, 5 HP, 230 V, 1-PH Enclosed VFD, MCCB, LR |
| | 7.5 | 24 | CIE3R-SUBP007-P2-1 | N3R, 7 HP, 230 V, 1-PH Enclosed VFD, MCCB, LR |
| | 10 | 32 | CIE3R-SUBP010-P2-1 (230 V Only) | N3R, 10 HP, 230 V, 1-PH Enclosed VFD, MCCB, LR |
| | 15 | 45 | CIE3R-SUBP015-P2-1 (230 V Only) | N3R, 15 HP, 230 V, 1-PH Enclosed VFD, MCCB, LR |
| | 20 | 60 | CIE3R-SUBP020-P2-1 (230 V Only) | N3R, 20 HP, 230 V, 1-PH Enclosed VFD, MCCB, LR |
| 200-230 V, 3-Phase | 3 | 12 | CIE3R-SUBP003-P2-3 | N3R, 3 HP, 230 V, 3-PH Enclosed VFD, MCCB, LR |
| | 5 | 20 | CIE3R-SUBP005-P2-3 | N3R, 5 HP, 230 V, 3-PH Enclosed VFD, MCCB, LR |
| | 7.5 | 30 | CIE3R-SUBP007-P2-3 | N3R, 7.5 HP, 230 V, 3-PH Enclosed VFD, MCCB, LR |
| | 10 | 40 | CIE3R-SUBP010-P2-3 | N3R, 10 HP, 230 V, 3-PH Enclosed VFD, MCCB, LR |
| | 15 | 55 | CIE3R-SUBP015-P2-3 | N3R, 15 HP, 230 V, 3-PH Enclosed VFD, MCCB, LR |
| | 20 | 74 | CIE3R-SUBP020-P2-3 | N3R, 20 HP, 230 V, 3-PH Enclosed VFD, MCCB, LR |
| | 25 | 85 | CIE3R-SUBP025-P2-3 | N3R, 25 HP, 230 V, 3-PH Enclosed VFD, MCCB, LR |
| | 30 | 100 | CIE3R-SUBP030-P2-3 | N3R, 30 HP, 230 V, 3-PH Enclosed VFD, MCCB, LR |
| 480 V, 1-Phase | 3 | 5.2 | CIE3R-SUBP003-P4-1 | N3R, 3 HP, 460 V, 1-PH Enclosed VFD, MCCB, LR, OR |
| | 5 | 8 | CIE3R-SUBP005-P4-1 | N3R, 5 HP, 460 V, 1-PH Enclosed VFD, MCCB, LR, OR |
| | 7.5 | 12 | CIE3R-SUBP007-P4-1 | N3R, 7 HP, 460 V, 1-PH Enclosed VFD, MCCB, LR, OR |
| | 10 | 18 | CIE3R-SUBP010-P4-1 | N3R, 10 HP, 460 V, 1-PH Enclosed VFD, MCCB,LR,OF |
| | 15 | 24 | CIE3R-SUBP015-P4-1 | N3R, 15 HP, 460 V, 1-PH Enclosed VFD, MCCB, LR, OF |
| | 20 | 30 | CIE3R-SUBP020-P4-1 | N3R, 20 HP, 460 V, 1-PH Enclosed VFD, MCCB, LR, OF |
| | 25 | 35.7 | CIE3R-SUBP025-P4-1 | N3R, 25 HP, 460 V, 1-PH Enclosed VFD, MCCB, LR, OF |
| | 30 | 45 | CIE3R-SUBP030-P4-1 | N3R, 30 HP, 460 V, 1-PH Enclosed VFD, MCCB, LR, OF |
| | 40 | 60.4 | CIE3R-SUBP040-P4-1 | N3R, 40 HP, 460 V, 1-PH Enclosed VFD, MCCB, LR, OF |
| | 50 | 75 | CIE3R-SUBP050-P4-1 | N3R, 50 HP, 460 V, 1-PH Enclosed VFD, MCCB, LR, OF |
| | 60 | 90.6 | CIE3R-SUBP060-P4-1 | N3R, 60 HP, 460 V, 1-PH Enclosed VFD, MCCB, LR, OF |
| | 75 | 101 | CIE3R-SUBP075-P4-1 | N3R, 75 HP, 460 V, 1-PH Enclosed VFD, MCCB, LR, OF |
| | 100 | 131 | CIE3R-SUBP100-P4-1 | N3R, 100 HP, 460 V, 1-PH Enclosed VFD, MCCB, LR, OF |
| | 125 | 178 | CIE3R-SUBP125-P4-1 | N3R, 125 HP, 460 V, 1-PH Enclosed VFD, MCCB, LR, OF |
| | 150 | 203 | CIE3R-SUBP150-P4-1 | N3R, 150 HP, 460 V, 1-PH Enclosed VFD, MCCB, LR, OF |
| | 200 | 264 | CIE3R-SUBP200-P4-1 | N3R, 200 HP, 460 V, 1-PH Enclosed VFD, MCCB, LR, OF |
| 480 V, 3-Phase | 3 | 6 | CIE3R-SUBP003-P4-3 | N3R, 3 HP, 460 V, 3-PH Enclosed VFD, MCCB, LR, OF |
| | 5 | 9.6 | CIE3R-SUBP005-P4-3 | N3R, 5 HP, 460 V, 3-PH Enclosed VFD, MCCB,LR,OF |
| | 7.5 | 13.3 | CIE3R-SUBP007-P4-3 | N3R, 7.5 HP, 460 V, 3-PH Enclosed VFD, MCCB, LR, OF |
| | 10 | 18 | CIE3R-SUBP010-P4-3 | N3R, 10 HP, 460 V, 3-PH Enclosed VFD, MCCB, LR, OF |
| | 15 | 25 | CIE3R-SUBP015-P4-3 | N3R, 15 HP, 460 V, 3-PH Enclosed VFD, MCCB, LR, OF |
| | 20 | 30 | CIE3R-SUBP020-P4-3 | N3R, 20 HP, 460 V, 3-PH Enclosed VFD, MCCB,LR,OF |
| | 25 | 40 | CIE3R-SUBP025-P4-3 | N3R, 25 HP, 460 V, 3-PH Enclosed VFD, MCCB, LR, OF |
| | 30 | 45 | CIE3R-SUBP030-P4-3 | N3R, 30 HP, 460 V, 3-PH Enclosed VFD, MCCB, LR, OF |
| | 40 | 65 | CIE3R-SUBP040-P4-3 | N3R, 40 HP, 460 V, 3-PH Enclosed VFD, MCCB, LR, OF |
| | 50 | 77 | CIE3R-SUBP050-P4-3 | N3R, 50 HP, 460 V, 3-PH Enclosed VFD, MCCB, LR, OF |
| | 60 | 93 | CIE3R-SUBP060-P4-3 | N3R, 60 HP, 460 V, 3-PH Enclosed VFD, MCCB, LR, OF |
| | 75 | 110 | CIE3R-SUBP075-P4-3 | N3R, 75 HP, 460 V, 3-PH Enclosed VFD, MCCB, LR, OF |
| | 100 | 150 | CIE3R-SUBP100-P4-3 | N3R, 100 HP, 460 V, 3-PH Enclosed VFD, MCCB, LR, OF |
| | 125 | 185 | CIE3R-SUBP125-P4-3 | N3R, 125 HP, 460 V, 3-PH Enclosed VFD, MCCB, LR, OF |
| | 150 | 230 | CIE3R-SUBP150-P4-3 | N3R, 150 HP, 460 V, 3-PH Enclosed VFD, MCCB, LR, OF |
| | 200 | 300 | CIE3R-SUBP200-P4-3 | N3R, 200 HP, 460 V, 3-PH Enclosed VFD, MCCB, LR, OF |

*NOTE: Phase refers to incoming power, not motor. The drive MUST BE sized according to the motor manufacturer's maximum amperage draw. Upsize VFD for ambient temperature compensation (see VFD specs for temperature rating). If 3-Phase open delta power source, consult the hotline for further sizing information.*

# P-SERIES VFD ENCLOSED - ORDERING & SIZING INFORMATION

## NEMA 3R LARGE DRIVE SURFACE (COMBINATION)

Single-Phase & Three-Phase (200-230 V, 480 V), UL/NEMA 3R Enclosure

| Voltage | HP | Max Amps | Model No. | Description |
|---|---|---|---|---|
| 208 V 1-Phase | 3 | 10.4 | CIE3R-CENP003-P2-1 | NEMA 3R, 3 HP, 230 V/1-PH Upsized VFD, MCCB, LR |
| | 5 | 17.6 | CIE3R-CENP005-P2-1 | NEMA 3R, 5 HP, 230 V/1-PH Upsized VFD, MCCB, LR |
| | 7.5 | 24 | CIE3R-CENP007-P2-1 | NEMA 3R, 7.5 HP, 230 V/1-PH Upsized VFD, MCCB, LR |
| | 10 | 32 | CIE3R-CENP010-P2-1 | NEMA 3R, 10 HP, 230 V/1-PH Upsized VFD, MCCB, LR |
| | 15 | 44 | CIE3R-CENP015-P2-1 | NEMA 3R, 15 HP, 230 V/1-PH Upsized VFD, MCCB, LR |
| | 20 | 54.9 | CIE3R-CENP020-P2-1 | NEMA 3R, 20 HP, 230 V/1-PH Upsized VFD, MCCB, LR |
| 230 V 3-Phase | 3 | 12 | CIE3R-CENP003-P2-3 | NEMA 3R, 3 HP, 230 V/3-PH Upsized VFD, MCCB, LR |
| | 5 | 19 | CIE3R-CENP005-P2-3 | NEMA 3R, 5 HP, 230 V/3-PH Upsized VFD, MCCB, LR |
| | 7 | 30 | CIE3R-CENP007-P2-3 | NEMA 3R, 7 HP, 230 V/3-PH Upsized VFD, MCCB, LR |
| | 10 | 34 | CIE3R-CENP010-P2-3 | NEMA 3R, 10 HP, 230 V/3-PH Upsized VFD, MCCB, LR |
| | 15 | 50 | CIE3R-CENP015-P2-3 | NEMA 3R, 15 HP, 230 V/3-PH Upsized VFD, MCCB, LR |
| | 20 | 62 | CIE3R-CENP020-P2-3 | NEMA 3R, 20 HP, 230 V/3-PH Upsized VFD, MCCB, LR |
| | 25 | 80 | CIE3R-CENP025-P2-3 | NEMA 3R, 25 HP, 230 V/3-PH Upsized VFD, MCCB, LR |
| | 30 | 100 | CIE3R-CENP030-P2-3 | NEMA 3R, 30 HP, 230 V/3-PH Upsized VFD, MCCB, LR |
| 480 V 1-Phase | 3 | 5.2 | CIE3R-CENP003-P4-1 | NEMA 3R, 3 HP, 460 V/1-PH Upsized VFD, MCCB, LR |
| | 5 | 7.7 | CIE3R-CENP005-P4-1 | NEMA 3R, 5 HP, 460 V/1-PH Upsized VFD, MCCB, LR |
| | 7 | 12 | CIE3R-CENP007-P4-1 | NEMA 3R, 7 HP, 460 V/1-PH Upsized VFD, MCCB, LR |
| | 10 | 16 | CIE3R-CENP010-P4-1 | NEMA 3R, 10 HP, 460 V/1-PH Upsized VFD, MCCB, LR |
| | 15 | 24 | CIE3R-CENP015-P4-1 | NEMA 3R, 15 HP, 460 V/1-PH Upsized VFD, MCCB, LR |
| | 20 | 27.4 | CIE3R-CENP020-P4-1 | NEMA 3R, 20 HP, 460 V/1-PH Upsized VFD, MCCB, LR |
| | 25 | 35.7 | CIE3R-CENP025-P4-1 | NEMA 3R, 25 HP, 460 V/1-PH Upsized VFD, MCCB, LR |
| | 30 | 42.3 | CIE3R-CENP030-P4-1 | NEMA 3R, 30 HP, 460 V/1-PH Upsized VFD, MCCB, LR |
| | 40 | 55 | CIE3R-CENP040-P4-1 | NEMA 3R, 40 HP, 460 V/1-PH Upsized VFD, MCCB, LR |
| | 50 | 71.4 | CIE3R-CENP050-P4-1 | NEMA 3R, 50 HP, 460 V/1-PH Upsized VFD, MCCB, LR |
| | 60 | 82.4 | CIE3R-CENP060-P4-1 | NEMA 3R, 60 HP, 460 V/1-PH Upsized VFD, MCCB, LR |
| | 75 | 96.1 | CIE3R-CENP075-P4-1 | NEMA 3R, 75 HP, 460 V/1-PH Upsized VFD, MCCB, LR |
| | 100 | 126 | CIE3R-CENP100-P4-1 | NEMA 3R, 100 HP, 460 V/1-PH Upsized VFD, MCCB, LR |
| | 125 | 164 | CIE3R-CENP125-P4-1 | NEMA 3R, 125 HP, 460 V/1-PH Upsized VFD, MCCB, LR |
| | 150 | 186 | CIE3R-CENP150-P4-1 | NEMA 3R, 150 HP, 460 V/1-PH Upsized VFD, MCCB, LR |
| | 200 | 252 | CIE3R-CENP200-P4-1 | NEMA 3R, 200 HP, 460 V/1-PH Upsized VFD, MCCB, LR |
| 480 V 3-Phase | 3 | 6 | CIE3R-CENP003-P4-3 | NEMA 3R, 3 HP, 460 V/3-PH Upsized VFD, MCCB, LR |
| | 5 | 9.6 | CIE3R-CENP005-P4-3 | NEMA 3R, 5 HP, 460 V/3-PH Upsized VFD, MCCB, LR |
| | 7 | 13.3 | CIE3R-CENP007-P4-3 | NEMA 3R, 7 HP, 460 V/3-PH Upsized VFD, MCCB, LR |
| | 10 | 14 | CIE3R-CENP010-P4-3 | NEMA 3R, 10 HP, 460 V/3-PH Upsized VFD, MCCB, LR |
| | 15 | 26.6 | CIE3R-CENP015-P4-3 | NEMA 3R, 15 HP, 460 V/3-PH Upsized VFD, MCCB, LR |
| | 20 | 30 | CIE3R-CENP020-P4-3 | NEMA 3R, 20 HP, 460 V/3-PH Upsized VFD, MCCB, LR |
| | 25 | 40 | CIE3R-CENP025-P4-3 | NEMA 3R, 25 HP, 460 V/3-PH Upsized VFD, MCCB, LR |
| | 30 | 45 | CIE3R-CENP030-P4-3 | NEMA 3R, 30 HP, 460 V/3-PH Upsized VFD, MCCB, LR |
| | 40 | 55 | CIE3R-CENP040-P4-3 | NEMA 3R, 40 HP, 460 V/3-PH Upsized VFD, MCCB, LR |
| | 50 | 65 | CIE3R-CENP050-P4-3 | NEMA 3R, 50 HP, 460 V/3-PH Upsized VFD, MCCB, LR |
| | 60 | 77 | CIE3R-CENP060-P4-3 | NEMA 3R, 60 HP, 460 V/3-PH Upsized VFD, MCCB, LR |
| | 75 | 110 | CIE3R-CENP075-P4-3 | NEMA 3R, 75 HP, 460 V/3-PH Upsized VFD, MCCB, LR |
| | 100 | 130 | CIE3R-CENP100-P4-3 | NEMA 3R, 100 HP, 460 V/3-PH Upsized VFD, MCCB, LR |
| | 125 | 165 | CIE3R-CENP125-P4-3 | NEMA 3R, 125 HP, 460 V/3-PH Upsized VFD, MCCB, LR |
| | 150 | 185 | CIE3R-CENP150-P4-3 | NEMA 3R, 150 HP, 460 V/3-PH Upsized VFD, MCCB, LR |
| | 200 | 240 | CIE3R-CENP200-P4-3 | NEMA 3R, 200 HP, 460 V/3-PH Upsized VFD, MCCB, LR |

*NOTE: If 3-phase open delta power source, consult the hotline for further sizing information.*

# P-SERIES VFD ENCLOSED - ORDERING & SIZING INFORMATION

## NEMA 3R LARGE DRIVE SUBMERSIBLES (COMBINATION)

Three-Phase (600 V) UL/NEMA 3R Enclosure

| Voltage | HP | Max Amps | Model No. | Description |
|---|---|---|---|---|
| 600 V, 3-Phase | 2 | 3.3 | CIE3R-SUBP002-P6-3 | N3R, 2 HP, 575 V, 3-PH Enclosed Upsized VFD, MCCB, LR, OF |
| | 3 | 6 | CIE3R-SUBP003-P6-3 | N3R, 3 HP, 575 V, 3-PH Enclosed Upsized VFD, MCCB, LR, OF |
| | 5 | 7 | CIE3R-SUBP005-P6-3 | N3R, 5 HP, 575 V, 3-PH Enclosed Upsized VFD, MCCB, LR, OF |
| | 7.5 | 11 | CIE3R-SUBP007-P6-3 | N3R, 7.5 HP, 575 V, 3-PH Enclosed Upsized VFD, MCCB, LR, OF |
| | 10 | 16 | CIE3R-SUBP010-P6-3 | N3R, 10 HP, 575 V, 3-PH Enclosed Upsized VFD, MCCB, LR, OF |
| | 15 | 19.5 | CIE3R-SUBP015-P6-3 | N3R, 15 HP, 575 V, 3-PH Enclosed Upsized VFD, MCCB, LR, OF |
| | 20 | 24 | CIE3R-SUBP020-P6-3 | N3R, 20 HP, 575 V, 3-PH Enclosed Upsized VFD, MCCB, LR, OF |
| | 25 | 30 | CIE3R-SUBP025-P6-3 | N3R, 25 HP, 575 V, 3-PH Enclosed Upsized VFD, MCCB, LR, OF |
| | 30 | 41 | CIE3R-SUBP030-P6-3 | N3R, 30 HP, 575 V, 3-PH Enclosed Upsized VFD, MCCB, LR, OF |
| | 40 | 52 | CIE3R-SUBP040-P6-3 | N3R, 40 HP, 575 V, 3-PH Enclosed Upsized VFD, MCCB, LR, OF |
| | 50 | 62 | CIE3R-SUBP050-P6-3 | N3R, 50 HP, 575 V, 3-PH Enclosed Upsized VFD, MCCB, LR, OF |
| | 60 | 77 | CIE3R-SUBP060-P6-3 | N3R, 60 HP, 575 V, 3-PH Enclosed Upsized VFD, MCCB, LR, OF |
| | 75 | 99 | CIE3R-SUBP075-P6-3 | N3R, 75 HP, 575 V, 3-PH Enclosed Upsized VFD, MCCB, LR, OF |
| | 100 | 125 | CIE3R-SUBP100-P6-3 | N3R, 100 HP, 575 V, 3-PH Enclosed Upsized VFD, MCCB, LR, OF |
| | 125 | 150 | CIE3R-SUBP125-P6-3 | N3R, 125 HP, 575 V, 3-PH Enclosed Upsized VFD, MCCB, LR, OF |

*NOTE: Phase refers to incoming power, not motor. The drive MUST BE sized according to the motor manufacturer's maximum amperage draw. Upsize VFD for ambient temperature compensation (see VFD specs for temperature rating).*

## NEMA 3R LARGE DRIVE SURFACE (COMBINATION)

Three-Phase (600 V) UL/NEMA 3R Enclosure

| Voltage | HP | Max Amps | Model No. | Description |
|---|---|---|---|---|
| 600 V, 3 Phase | 2 | 3.3 | CIE3R-CENP002-P6-3 | N3R, 2 HP, 575 V, 3-PH Enclosed Upsized VFD, MCCB, LR, OR |
| | 3 | 5 | CIE3R-CENP003-P6-3 | N3R, 3 HP, 575 V, 3-PH Enclosed Upsized VFD, MCCB, LR, OR |
| | 5 | 7 | CIE3R-CENP005-P6-3 | N3R, 5 HP, 575 V, 3-PH Enclosed Upsized VFD, MCCB, LR, OR |
| | 7.5 | 10.4 | CIE3R-CENP007-P6-3 | N3R, 7.5 HP, 575 V, 3-PH Enclosed Upsized VFD, MCCB, LR, OR |
| | 10 | 11 | CIE3R-CENP010-P6-3 | N3R, 10 HP, 575 V, 3-PH Enclosed Upsized VFD, MCCB, LR, OR |
| | 15 | 19.5 | CIE3R-CENP015-P6-3 | N3R, 15 HP, 575 V, 3-PH Enclosed Upsized VFD, MCCB, LR, OR |
| | 20 | 24 | CIE3R-CENP020-P6-3 | N3R, 20 HP, 575 V, 3-PH Enclosed Upsized VFD, MCCB, LR, OR |
| | 25 | 30 | CIE3R-CENP025-P6-3 | N3R, 25 HP, 575 V, 3-PH Enclosed Upsized VFD, MCCB, LR, OR |
| | 30 | 32 | CIE3R-CENP030-P6-3 | N3R, 30 HP, 575 V, 3-PH Enclosed Upsized VFD, MCCB, LR, OR |
| | 40 | 41 | CIE3R-CENP040-P6-3 | N3R, 40 HP, 575 V, 3-PH Enclosed Upsized VFD, MCCB, LR, OR |
| | 50 | 52 | CIE3R-CENP050-P6-3 | N3R, 50 HP, 575 V, 3-PH Enclosed Upsized VFD, MCCB, LR, OR |
| | 60 | 62 | CIE3R-CENP060-P6-3 | N3R, 60 HP, 575 V, 3-PH Enclosed Upsized VFD, MCCB, LR, OR |
| | 75 | 77 | CIE3R-CENP075-P6-3 | N3R, 75 HP, 575 V, 3-PH Enclosed Upsized VFD, MCCB, LR, OR |
| | 100 | 99 | CIE3R-CENP100-P6-3 | N3R, 100 HP, 575 V, 3-PH Enclosed Upsized VFD, MCCB, LR, OR |
| | 125 | 125 | CIE3R-CENP125-P6-3 | N3R, 125 HP, 575 V, 3-PH Enclosed Upsized VFD, MCCB, LR, OR |

*NOTE: Phase refers to incoming power, not motor. The drive MUST BE sized according to the motor manufacturer's maximum amperage draw. Upsize VFD for ambient temperature compensation (see VFD specs for temperature rating).*

## NEMA 3R LARGE DRIVE OPTIONS

| Model No. | Description |
|---|---|
| VFD-FPL | Fault Pilot Light (Red Standard) |
| VFD-KPD-3R | External Keypad with Clear Cover (Type 3R Rated) |
| VFD-KPD-4X | Door Mounted Keypad with Type 4X Cover |
| VFD-KPD | Door Mounted Keypad |
| VFD-RPL | Run Pilot Light (Green Standard) |
| VFD-SPD | Door Mounted Speed Potentiometer |
| PSIG-100-20FT | Transducer (Gauge Pressure), 100 PSIG 4-20 mA, +/-0.5% accy |
| PSIG-200-20FT | Transducer (Gauge Pressure), 200 PSIG 4-20 mA, +/-0.5% accy |
| PSIG-300-20FT | Transducer (Gauge Pressure), 300 PSIG 4-20 mA, +/-0.5% accy |

# P-SERIES VFD ENCLOSED - DIMENSIONS

## NEMA 3R LARGE DRIVE SUBMERSIBLES

| Model No. | H | W | D |
|---|---|---|---|
| CIE3R-SUBP003-P2-1 | 33 | 22 | 12 |
| CIE3R-SUBP005-P2-1 | | | |
| CIE3R-SUBP007-P2-1 | | | |
| CIE3R-SUBP010-P2-1 | 38 | 25 | 12 |
| CIE3R-SUBP015-P2-1 | 43 | 25 | 12 |
| CIE3R-SUBP020-P2-1 | | | |
| CIE3R-SUBP003-P2-3 | 33 | 22 | 12 |
| CIE3R-SUBP005-P2-3 | | | |
| CIE3R-SUBP007-P2-3 | | | |
| CIE3R-SUBP010-P2-3 | | | |
| CIE3R-SUBP015-P2-3 | 38 | 25 | 12 |
| CIE3R-SUBP020-P2-3 | | | |
| CIE3R-SUBP030-P2-3 | 43 | 25 | 12 |
| CIE3R-SUBP003-P4-1 | 33 | 22 | 12 |
| CIE3R-SUBP005-P4-1 | | | |
| CIE3R-SUBP007-P4-1 | | | |
| CIE3R-SUBP010-P4-1 | 38 | 25 | 12 |
| CIE3R-SUBP015-P4-1 | 43 | 25 | 12 |
| CIE3R-SUBP020-P4-1 | | | |

| Model No. | H | W | D |
|---|---|---|---|
| CIE3R-SUBP025-P4-1 | 48 | 30 | 16 |
| CIE3R-SUBP030-P4-1 | | | |
| CIE3R-SUBP040-P4-1 | | | |
| CIE3R-SUBP050-P4-1 | 53 | 35 | 16 |
| CIE3R-SUBP060-P4-1 | | | |
| CIE3R-SUBP075-P4-1 | 60 | 60 | 24 |
| CIE3R-SUBP100-P4-1 | | | |
| CIE3R-SUBP125-P4-1 | | | |
| CIE3R-SUBP150-P4-1 | 72 | 60 | 24 |
| CIE3R-SUBP200-P4-1 | | | |
| CIE3R-SUBP003-P4-3 | 33 | 22 | 12 |
| CIE3R-SUBP005-P4-3 | | | |
| CIE3R-SUBP007-P4-3 | | | |
| CIE3R-SUBP010-P4-3 | | | |
| CIE3R-SUBP015-P4-3 | 38 | 25 | 12 |
| CIE3R-SUBP020-P4-3 | | | |
| CIE3R-SUBP025-P4-3 | 43 | 25 | 12 |
| CIE3R-SUBP030-P4-3 | | | |
| CIE3R-SUBP040-P4-3 | 48 | 30 | 16 |
| CIE3R-SUBP050-P4-3 | | | |
| CIE3R-SUBP060-P4-3 | | | |

| Model No. | H | W | D |
|---|---|---|---|
| CIE3R-SUBP075-P4-3 | 53 | 35 | 16 |
| CIE3R-SUBP100-P4-3 | | | |
| CIE3R-SUBP125-P4-3 | 60 | 60 | 24 |
| CIE3R-SUBP150-P4-3 | | | |
| CIE3R-SUBP200-P4-3 | | | |
| CIE3R-SUBP250-P4-3 | 72 | 60 | 24 |
| CIE3R-SUBP300-P4-3 | | | |
| CIE3R-SUBP350-P4-3 | | | |
| CIE3R-SUBP002-P6-3 | 33 | 22 | 12 |
| CIE3R-SUBP003-P6-3 | | | |
| CIE3R-SUBP005-P6-3 | | | |
| CIE3R-SUBP007-P6-3 | | | |
| CIE3R-SUBP010-P6-3 | | | |
| CIE3R-SUBP015-P6-3 | 38 | 25 | 12 |
| CIE3R-SUBP020-P6-3 | | | |
| CIE3R-SUBP025-P6-3 | 43 | 25 | 12 |
| CIE3R-SUBP030-P6-3 | | | |
| CIE3R-SUBP040-P6-3 | 48 | 30 | 16 |
| CIE3R-SUBP050-P6-3 | | | |
| CIE3R-SUBP060-P6-3 | | | |
| CIE3R-SUBP075-P6-3 | 53 | 35 | 16 |
| CIE3R-SUBP100-P6-3 | | | |
| CIE3R-SUBP125-P6-3 | 60 | 60 | 24 |

## NEMA 3R LARGE DRIVE CENTRIFUGALS

| Model No. | H | W | D |
|---|---|---|---|
| CIE3R-CENP003-P2-1 | 33 | 22 | 12 |
| CIE3R-CENP005-P2-1 | | | |
| CIE3R-CENP007-P2-1 | | | |
| CIE3R-CENP010-P2-1 | 38 | 25 | 12 |
| CIE3R-CENP015-P2-1 | 43 | 25 | 12 |
| CIE3R-CENP020-P2-1 | | | |
| CIE3R-CENP003-P2-3 | 33 | 22 | 12 |
| CIE3R-CENP005-P2-3 | | | |
| CIE3R-CENP007-P2-3 | | | |
| CIE3R-CENP010-P2-3 | | | |
| CIE3R-CENP015-P2-3 | 38 | 25 | 12 |
| CIE3R-CENP020-P2-3 | | | |
| CIE3R-CENP030-P2-3 | 43 | 25 | 12 |
| CIE3R-CENP003-P4-1 | 33 | 22 | 12 |
| CIE3R-CENP005-P4-1 | | | |
| CIE3R-CENP007-P4-1 | | | |
| CIE3R-CENP010-P4-1 | 38 | 25 | 12 |
| CIE3R-CENP015-P4-1 | 43 | 25 | 12 |
| CIE3R-CENP020-P4-1 | | | |

| Model No. | H | W | D |
|---|---|---|---|
| CIE3R-CENP025-P4-1 | 48 | 30 | 16 |
| CIE3R-CENP030-P4-1 | | | |
| CIE3R-CENP040-P4-1 | | | |
| CIE3R-CENP050-P4-1 | 53 | 35 | 16 |
| CIE3R-CENP060-P4-1 | | | |
| CIE3R-CENP075-P4-1 | 60 | 60 | 24 |
| CIE3R-CENP100-P4-1 | | | |
| CIE3R-CENP125-P4-1 | | | |
| CIE3R-CENP150-P4-1 | 72 | 60 | 24 |
| CIE3R-CENP200-P4-1 | | | |
| CIE3R-CENP003-P4-3 | 33 | 22 | 12 |
| CIE3R-CENP005-P4-3 | | | |
| CIE3R-CENP007-P4-3 | | | |
| CIE3R-CENP010-P4-3 | | | |
| CIE3R-CENP015-P4-3 | 38 | 25 | 12 |
| CIE3R-CENP020-P4-3 | | | |
| CIE3R-CENP025-P4-3 | 43 | 25 | 12 |
| CIE3R-CENP030-P4-3 | | | |
| CIE3R-CENP040-P4-3 | 48 | 30 | 16 |
| CIE3R-CENP050-P4-3 | | | |
| CIE3R-CENP060-P4-3 | | | |

| Model No. | H | W | D |
|---|---|---|---|
| CIE3R-CENP075-P4-3 | 53 | 35 | 16 |
| CIE3R-CENP100-P4-3 | | | |
| CIE3R-CENP125-P4-3 | 60 | 60 | 24 |
| CIE3R-CENP150-P4-3 | | | |
| CIE3R-CENP200-P4-3 | | | |
| CIE3R-CENP250-P4-3 | 72 | 60 | 24 |
| CIE3R-CENP300-P4-3 | | | |
| CIE3R-CENP350-P4-3 | | | |
| CIE3R-CENP002-P6-3 | 33 | 22 | 12 |
| CIE3R-CENP003-P6-3 | | | |
| CIE3R-CENP005-P6-3 | | | |
| CIE3R-CENP007-P6-3 | | | |
| CIE3R-CENP010-P6-3 | | | |
| CIE3R-CENP015-P6-3 | 38 | 25 | 12 |
| CIE3R-CENP020-P6-3 | | | |
| CIE3R-CENP025-P6-3 | 43 | 25 | 12 |
| CIE3R-CENP030-P6-3 | | | |
| CIE3R-CENP040-P6-3 | 48 | 30 | 16 |
| CIE3R-CENP050-P6-3 | | | |
| CIE3R-CENP060-P6-3 | | | |
| CIE3R-CENP075-P6-3 | 53 | 35 | 16 |
| CIE3R-CENP100-P6-3 | | | |
| CIE3R-CENP125-P6-3 | 60 | 60 | 24 |

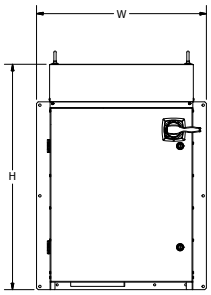


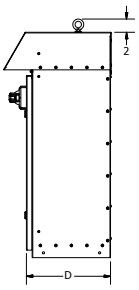


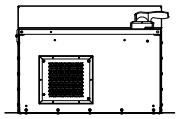

FRANKLIN CONTROL SYSTEMS

# P-SERIES VFD STAND ALONE - ORDERING & SIZING INFORMATION

## STAND ALONE DRIVE (200-230 V)

Single-Phase & Three-Phase

| Model No. | Output Max Amps | | 3% Line Reactor* |
|---|---|---|---|
| | 1Ø | 3Ø | Model No. |
| CI-007-P2 | 12 | 24 | KDRULB23LE01 |
| CI-010-P2 | 16 | 32 | KDRULD25LE01 |
| CI-015-P2 | 24 | 46 | KDRULD24LE01 |
| CI-020-P2 | 32 | 60 | KDRULD26LE01 |
| CI-025-P2 | 37 | 74 | KDRULC22LE01 |
| CI-030-P2 | 46 | 88 | KDRULF24LE01 |
| CI-040-P2 | 60 | 115 | KDRULF25LE01 |

*NOTE: Phase refers to incoming power, not motor. The drive MUST BE sized according to the motor manufacturer's maximum amperage draw. Upsize VFD for ambient temperature compensation (see VFD specs for temperature rating).*
** 3% Line Reactors are sold separately from stand alone drives.*

## STAND ALONE DRIVE (480 V)

Single-Phase & Three-Phase

| Model No. | Output Max Amps | | 3% Line Reactor* |
|---|---|---|---|
| | 1Ø | 3Ø | Model No. |
| CI-007-P4 | 6 | 12 | KDRULA4LE01 |
| CI-010-P4 | 8 | 16 | KDRULA5LE01 |
| CI-015-P4 | 12 | 24 | KDRULB2LE01 |
| CI-020-P4 | 16 | 30 | KDRULB1LE01 |
| CI-025-P4 | 19 | 39 | KDRULD1LE01 |
| CI-030-P4 | 24 | 45 | KDRULD2LE01 |
| CI-040-P4 | 30 | 61 | KDRULC1LE01 |
| CI-050-P4 | 39 | 75 | KDRULF2LE01 |
| CI-060-P4 | 45 | 91 | KDRULF4LE01 |
| CI-075-P4 | 55 | 110 | KDRULF3LE01 |
| CI-100-P4 | 75 | 152 | KDRULH3LE01 |
| CI-125-P4 | 91 | 183 | KDRULH2LE01 |
| CI-150-P4 | 110 | 223 | KDRULH1LE01 |
| CI-200-P4 | 152 | 264 | KDRULG3LE01 |
| CI-250-P4 | 183 | 325 | KDRULG1LE01 |
| CI-350-P4 | 223 | 432 | KDRULJ2LE01 |
| CI-400-P4 | 264 | 547 | KDRULJ1LE01 |

*NOTE: Phase refers to incoming power, not motor. The drive MUST BE sized according to the motor manufacturer's maximum amperage draw. Upsize VFD for ambient temperature compensation (see VFD specs for temperature rating). For motor leads longer than 1000' on 200 V/230 V and 100' on 480 V, please contact Franklin Control Systems for output reactor or output filter sizing.*
** 3% Line Reactors are sold separately from stand alone drives.*

# P-SERIES VFD STAND ALONE - ORDERING & SIZING INFORMATION

## STAND ALONE DRIVE (600 V, 3Ø)

| Model No. | Output Max Amps | 3% Line Reactor * |
|---|---|---|
| | 3Ø | Model No. |
| CI-007-P6 | 9 | KDRULA48LE01 |
| CI-010-P6 | 12 | KDRULA49LE01 |
| CI-015-P6 | 17 | KDRULA45LE01 |
| CI-020-P6 | 23 | KDRULB44LE01 |
| CI-025-P6 | 27 | KDRULB43LE01 |
| CI-030-P6 | 34 | KDRULD42LE01 |
| CI-040-P6 | 43 | KDRULC43LE01 |
| CI-050-P6 | 55 | KDRULC44LE01 |
| CI-060-P6 | 64 | KDRULF46LE01 |
| CI-075-P6 | 80 | KDRULF47LE01 |
| CI-100-P6 | 104 | KDRULF45LE01 |
| CI-125-P6 | 128 | KDRULH43LE01 |

*NOTE: Phase refers to incoming power, not motor. The drive MUST BE sized according to the motor manufacturer's maximum amperage draw. Upsize VFD for ambient temperature compensation (see VFD specs for temperature rating).*
** 3% Line Reactors are sold separately from stand alone drives.*

# P-SERIES VFD STAND ALONE - DIMENSIONS

## SUBMERSIBLES

| P-Series Drive | H | W | D |
|---|---|---|---|
| CI-007-P2 | 11.18 | 5.91 | 6.16 |
| CI-007-P4 | | | |
| CI-007-P6 | 13.98 | 7.87 | 7.19 |
| CI-010-P2 | 11.18 | 7.87 | 7.16 |
| CI-010-P4 | | | |
| CI-010-P6 | 13.98 | 7.87 | 7.19 |
| CI-015-P2 | 11.18 | 7.87 | 7.16 |
| CI-015-P4 | | | |
| CI-015-P6 | 13.98 | 7.87 | 7.19 |
| CI-020-P2 | 15.16 | 9.84 | 7.91 |
| CI-020-P4 | | | |
| CI-020-P6 | 15.16 | 9.84 | 7.91 |
| CI-025-P2 | 15.16 | 9.84 | 7.91 |
| CI-025-P4 | | | |
| CI-025-P6 | 15.16 | 9.84 | 7.91 |
| CI-030-P2 | 18.11 | 11.97 | 9.21 |
| CI-030-P4 | | | |
| CI-030-P6 | 18.11 | 11.97 | 9.21 |
| CI-040-P2 | 18.11 | 11.97 | 9.21 |
| CI-040-P4 | | | |
| CI-040-P6 | 18.11 | 11.97 | 9.21 |
| CI-050-P4 | 25.28 | 11.81 | 10.46 |
| CI-050-P6 | 25.28 | 11.81 | 11.52 |
| CI-060-P4 | 25.28 | 11.81 | 10.46 |
| CI-060-P6 | 25.28 | 11.81 | 11.52 |
| CI-075-P4 | 25.28 | 11.81 | 11.52 |
| CI-075-P6 | 25.28 | 11.81 | 11.52 |
| CI-100-P4 | 30.22 | 14.57 | 13.29 |
| CI-100-P6 | 30.22 | 14.57 | 13.29 |
| CI-125-P4 | 30.22 | 14.57 | 13.29 |
| CI-125-P6 | 30.22 | 14.57 | 13.29 |
| CI-150-P4 | 30.87 | 20.08 | 16.64 |
| CI-150-P6 | 30.87 | 20.08 | 16.64 |
| CI-200-P4 | 30.87 | 20.08 | 16.64 |
| CI-250-P4 | 33.9 | 20.08 | 16.64 |
| CI-350-P4 | 42.44 | 27.17 | 17.70 |
| CI-400-P4 | | | |
| CI-500-P4 | 44.9 | 30.4 | 17.4 |
| CI-600-P4 | 51.3 | 36.3 | 19.5 |
| CI-700-P4 | | | |

*NOTE: All measurements in inches*

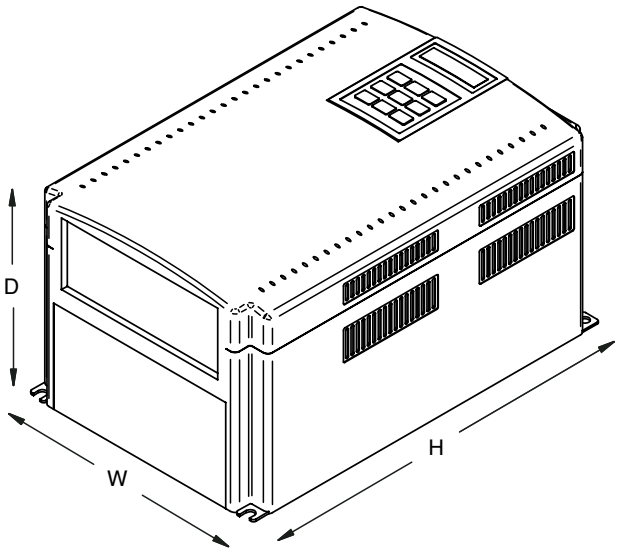


** Line Reactors housed in separate UL/NEMA 1 Type Enclosure*

# P-SERIES VFD STAND ALONE - WIRING DIAGRAM

## 5.5~90 KW (7.5~125 HP)

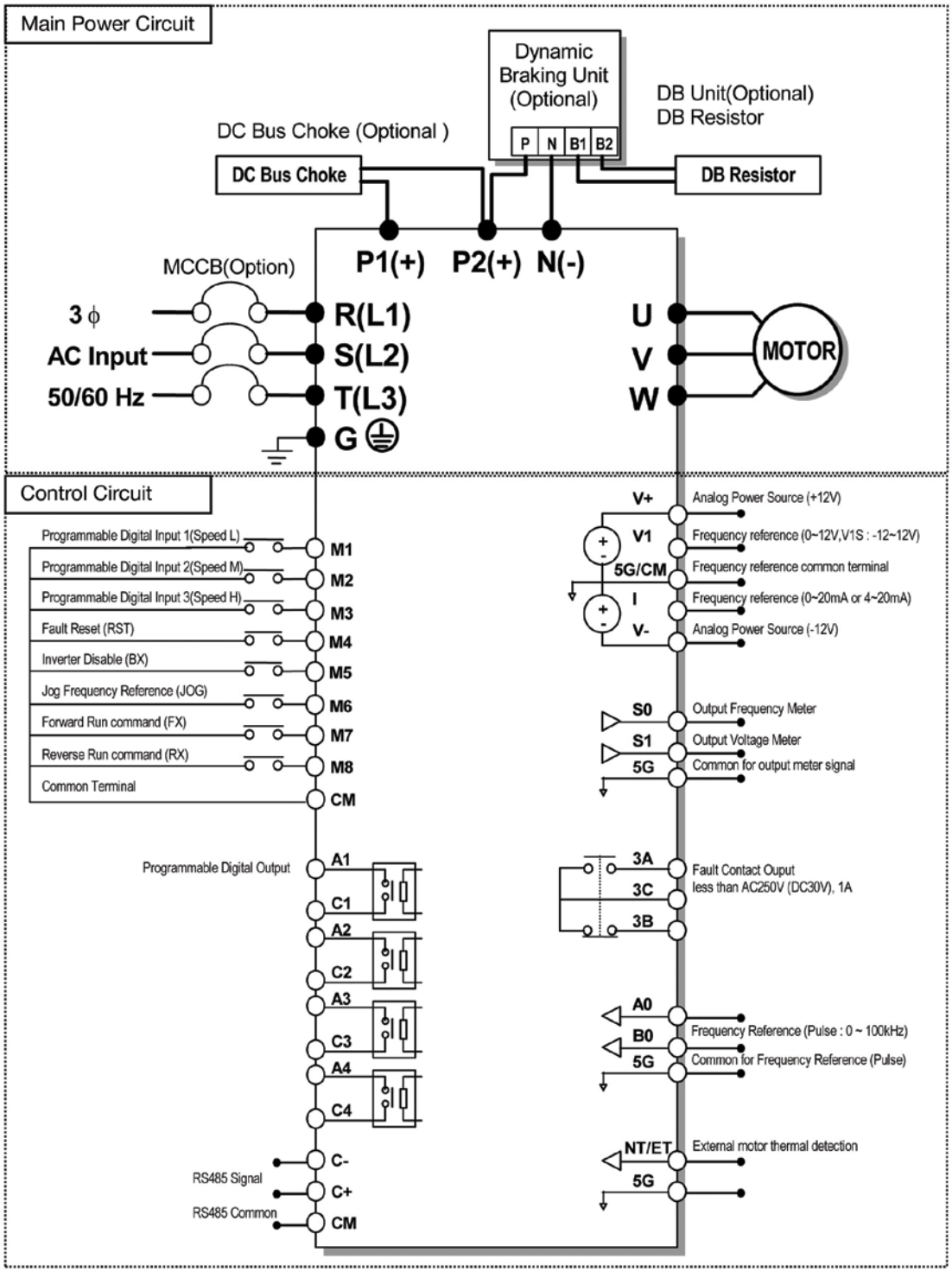


*NOTE: 5G is common ground for analog input/output for 7.5-40 hp. 5G is common ground for analog meter output (S0, S1) and external motor thermal detection (ET). Use terminal V1 for V1, V1S (0-12 V -12-12 V) input. For general reference only, not field wiring. Consult installation instructions.*

FRANKLIN CONTROL SYSTEMS

# P-SERIES VFD STAND ALONE - SPECIFICATIONS

## SPECIFICATIONS

| | |
|---|---|
| **Output Ratings** | |
| Voltage (V) | Three-phase, 200~230 V, Three-phase, 380~480 V, Three-phase 525~600 V |
| Frequency (Hz) | 0~120 Hz |
| **Input Ratings** | |
| Voltage (V) | Single- and three-phase, 200~230 V (-15%, +10%), single- and three-phase, 380~480 V (-15%, +10%), Three-phase 525~600 V (-15%,+10%) |
| Frequency (Hz) | 50~60 Hz (±5%) |
| Input Power Factor | > .95 from no load to full load |
| **Operation** | |
| Drive Efficiency | > 96% |
| Control Method | V/F control, sensorless vector control |
| Frequency Setting Resolution | Digital reference: 0.01 Hz (below 99 Hz) & 0.1 Hz (100 Hz and over); Analog reference: 0.06 Hz at 60 Hz |
| Frequency Setting Accuracy | Digital: 0.01% of maximum output frequency; Analog: 0.1% of maximum output frequency |
| V/F Ratio | Linear, Square, User V/F |
| Overload Capacity | 1 minute at 120%, 10 seconds at 150% (with inverse characteristic proportional to time) |
| Torque Boost | Auto, manual (0~15%) |
| Multi-Function Input Terminals | Total 8 inputs (programmable) |
| Analog Output | 0~10 V linear |
| **Input Signal** | |
| Operator Control | 32-character LCD keypad, Terminals, ModBus-RTU communication |
| | Optional, ProfiBus-DP, DeviceNet, F-Net, BACnet, LonWorks |
| Frequency Setting | Analog: 0~10 V, 4~20mA, additional port for Sub-Board (0~10 V); Digital: Keypad, Communication |
| Start Signal | Forward, reverse |
| Multi-Step Operation | Setting up to 17 speeds (using multi-function terminal) |
| Multi-Step Accel/Decel Time | 0.1~6000 seconds. Maximum 8 pre-defined steps using multi-function terminals |
| Operational Functions | DC braking, frequency limit, frequency jump, second motor function, slip compensation, reverse rotation prevention, auto restart, inverter bypass, auto-tuning, dual PID control |
| Emergency Stop | Stops output from inverter |
| Auto Operation | Operates from internal sequence by setting multi-function terminal (5 way x 8 step) |
| Jog | Jog operation |
| Fault Reset | Resets fault signal when protective function is active |
| **Output Signal** | |
| Operational Status | Frequency detection, overload alarm, stall, overvoltage, undervoltage, inverter overheat, run, stop, constant speed, speed search, fault output, inverter bypass, auto-operation sequence |
| Indicator | Output frequency, output current, output voltage, DC voltage, output torque (output voltage: 0~10 V) |
| **Protective Functions** | |
| Trip | Overvoltage, undervoltage, overcurrent, inverter overheat, motor overheat, i/o-phase loss, fuse open, ground fault, external fault 1, 2, option fault, overload, speed command loss, hardware fault, communication error, etc. |
| Alarm | Stall, overload temperature sensor fault |
| **Operating Environment** | |
| Ambient Temperature | -10~40 °C (50 °C when derated 20%) or 14~104 °F (122 °F when derated 20%) |
| Storage Temperature | -20 ~65 °C or -4~149.5 °F |
| Humidity | Less than 95% relative humidity maximum (non-condensing) |
| Vibration | Below 5.9m$^2$/sec (=0.6g) |
| Altitude | Max. 3,300 ft (1000 m): derate 1% for every additional 330 ft. Derating 20% allows for installation up to 10,000 ft |
| Application Site | Pollution degree 2. no corrosive gas, combustible gas, oil mist or dust |

# P-SERIES VFD STAND ALONE - ACCESSORIES

## LINE REACTORS 208-240 V (STAND ALONE DRIVES ONLY)

UL/NEMA 1 Enclosure

| Voltage | Amps | Model No. | Description |
|---|---|---|---|
| 208/240 V, 3% | 3 | KDRULA54LE01 | 3%, 208/240 V, Enclosed Type 1 Line Reactor, UL Listed, 3 Amps |
| | 4.2 | KDRULA53LE01 | 3%, 208/240 V, Enclosed Type 1 Line Reactor, UL Listed, 4.2 Amps |
| | 5.5 | KDRULA25LE01 | 3%, 208/240 V, Enclosed Type 1 Line Reactor, UL Listed, 5.5 Amps |
| | 8 | KDRULA26LE01 | 3%, 208/240 V, Enclosed Type 1 Line Reactor, UL Listed, 8 Amps |
| | 10 | KDRULA27LE01 | 3%, 208/240 V, Enclosed Type 1 Line Reactor, UL Listed, 10 Amps |
| | 12 | KDRULA28LE01 | 3%, 208/240 V, Enclosed Type 1 Line Reactor, UL Listed, 12 Amps |
| | 19 | KDRULB22LE01 | 3%, 208/240 V, Enclosed Type 1 Line Reactor, UL Listed, 19 Amps |
| | 25 | KDRULB23LE01 | 3%, 208/240 V, Enclosed Type 1 Line Reactor, UL Listed, 25 Amps |
| | 34 | KDRULD25LE01 | 3%, 208/240 V, Enclosed Type 1 Line Reactor, UL Listed, 34 Amps |
| | 48 | KDRULD24LE01 | 3%, 208/240 V, Enclosed Type 1 Line Reactor, UL Listed, 48 Amps |
| | 62 | KDRULD26LE01 | 3%, 208/240 V, Enclosed Type 1 Line Reactor, UL Listed, 62 Amps |
| | 80 | KDRULC22LE01 | 3%, 208/240 V, Enclosed Type 1 Line Reactor, UL Listed, 80 Amps |
| | 100 | KDRULF24LE01 | 3%, 208/240 V, Enclosed Type 1 Line Reactor, UL Listed, 100 Amps |
| | 118 | KDRULF25LE01 | 3%, 208/240 V, Enclosed Type 1 Line Reactor, UL Listed, 118 Amps |
| 208/240 V, 5% | 3 | KDRULA54HE01 | 5%, 208/240 V, Enclosed Type 1 Line Reactor, UL Listed, 3 Amps |
| | 5 | KDRULA53HE01 | 5%, 208/240 V, Enclosed Type 1 Line Reactor, UL Listed, 5 Amps |
| | 5 | KDRULA25HE01 | 5%, 208/240 V, Enclosed Type 1 Line Reactor, UL Listed, 5 Amps |
| | 7.5 | KDRULA27HE01 | 5%, 208/240 V, Enclosed Type 1 Line Reactor, UL Listed, 7.5 Amps |
| | 10 | KDRULA26HE01 | 5%, 208/240 V, Enclosed Type 1 Line Reactor, UL Listed, 10 Amps |
| | 11 | KDRULA28HE01 | 5%, 208/240 V, Enclosed Type 1 Line Reactor, UL Listed, 11 Amps |
| | 17 | KDRULB25HE01 | 5%, 208/240 V, Enclosed Type 1 Line Reactor, UL Listed, 17 Amps |
| | 26 | KDRULB26HE01 | 5%, 208/240 V, Enclosed Type 1 Line Reactor, UL Listed, 26 Amps |
| | 31 | KDRULD21HE01 | 5%, 208/240 V, Enclosed Type 1 Line Reactor, UL Listed, 31 Amps |
| | 47 | KDRULD22HE01 | 5%, 208/240 V, Enclosed Type 1 Line Reactor, UL Listed, 47 Amps |
| | 62 | KDRULC22HE01 | 5%, 208/240 V, Enclosed Type 1 Line Reactor, UL Listed, 62 Amps |
| | 75 | KDRULF28HE01 | 5%, 208/240 V, Enclosed Type 1 Line Reactor, UL Listed, 75 Amps |
| | 92 | KDRULF25HE01 | 5%, 208/240 V, Enclosed Type 1 Line Reactor, UL Listed, 92 Amps |
| | 114 | KDRULF26HE01 | 5%, 208/240 V, Enclosed Type 1 Line Reactor, UL Listed, 114 Amps |

FRANKLIN CONTROL SYSTEMS

# P-SERIES VFD STAND ALONE - ACCESSORIES

## LINE REACTORS 480 V (STAND ALONE DRIVES ONLY)

UL/NEMA 1 Enclosure

| Voltage | Amps | Model No. | Description |
|---|---|---|---|
| 480 V, 3% | 1.5 | KDRULA6LE01 | 3%, 480 V, Enclosed Type 1 Line Reactor, UL Listed, 1.5 Amps |
| | 1.6 | KDRULA7LE01 | 3%, 480 V, Enclosed Type 1 Line Reactor, UL Listed, 1.6 Amps |
| | 2.1 | KDRULA8LE01 | 3%, 480 V, Enclosed Type 1 Line Reactor, UL Listed, 2.1 Amps |
| | 3 | KDRULA9LE01 | 3%, 480 V, Enclosed Type 1 Line Reactor, UL Listed, 3 Amps |
| | 6.4 | KDRULA1LE01 | 3%, 480 V, Enclosed Type 1 Line Reactor, UL Listed, 6.4 Amps |
| | 6 | KDRULA2LE01 | 3%, 480 V, Enclosed Type 1 Line Reactor, UL Listed, 6 Amps |
| | 9.6 | KDRULA3LE01 | 3%, 480 V, Enclosed Type 1 Line Reactor, UL Listed, 9.6 Amps |
| | 14 | KDRULA4LE01 | 3%, 480 V, Enclosed Type 1 Line Reactor, UL Listed, 14 Amps |
| | 14 | KDRULA5LE01 | 3%, 480 V, Enclosed Type 1 Line Reactor, UL Listed, 14 Amps |
| | 30 | KDRULB2LE01 | 3%, 480 V, Enclosed Type 1 Line Reactor, UL Listed, 30 Amps |
| | 30 | KDRULB1LE01 | 3%, 480 V, Enclosed Type 1 Line Reactor, UL Listed, 30 Amps |
| | 50 | KDRULD1LE01 | 3%, 480 V, Enclosed Type 1 Line Reactor, UL Listed, 50 Amps |
| | 45 | KDRULD2LE01 | 3%, 480 V, Enclosed Type 1 Line Reactor, UL Listed, 45 Amps |
| | 55 | KDRULC1LE01 | 3%, 480 V, Enclosed Type 1 Line Reactor, UL Listed, 55 Amps |
| | 65 | KDRULF2LE01 | 3%, 480 V, Enclosed Type 1 Line Reactor, UL Listed, 65 Amps |
| | 77 | KDRULF4LE01 | 3%, 480 V, Enclosed Type 1 Line Reactor, UL Listed, 77 Amps |
| | 110 | KDRULF3LE01 | 3%, 480 V, Enclosed Type 1 Line Reactor, UL Listed, 110 Amps |
| | 150 | KDRULH3LE01 | 3%, 480 V, Enclosed Type 1 Line Reactor, UL Listed, 150 Amps |
| | 165 | KDRULH2LE01 | 3%, 480 V, Enclosed Type 1 Line Reactor, UL Listed, 165 Amps |
| | 185 | KDRULH1LE01 | 3%, 480 V, Enclosed Type 1 Line Reactor, UL Listed, 185 Amps |
| | 240 | KDRULG3LE01 | 3%, 480 V, Enclosed Type 1 Line Reactor, UL Listed, 240 Amps |
| | 370 | KDRULG2LE01 | 3%, 480 V, Enclosed Type 1 Line Reactor, UL Listed, 370 Amps |
| | 500 | KDRULJ2LE01 | 3%, 480 V, Enclosed Type 1 Line Reactor, UL Listed, 500 Amps |
| | 520 | KDRULJ1LE01 | 3%, 480 V, Enclosed Type 1 Line Reactor, UL Listed, 520 Amps |
| | 610 | KDRULL2LE01 | 3%, 480 V, Enclosed Type 1 Line Reactor, UL Listed, 610 Amps |
| 480 V, 5% | 1.5 | KDRULA6HE01 | 5%, 480 V, Enclosed Type 1 Line Reactor, UL Listed, 1.5 Amps |
| | 1.6 | KDRULA7HE01 | 5%, 480 V, Enclosed Type 1 Line Reactor, UL Listed, 1.6 Amps |
| | 2.1 | KDRULA8HE01 | 5%, 480 V, Enclosed Type 1 Line Reactor, UL Listed, 2.1 Amps |
| | 4 | KDRULA1HE01 | 5%, 480 V, Enclosed Type 1 Line Reactor, UL Listed, 4 Amps |
| | 6 | KDRULA2HE01 | 5%, 480 V, Enclosed Type 1 Line Reactor, UL Listed, 6 Amps |
| | 8 | KDRULA3HE01 | 5%, 480 V, Enclosed Type 1 Line Reactor, UL Listed, 8 Amps |
| | 12 | KDRULA4HE01 | 5%, 480 V, Enclosed Type 1 Line Reactor, UL Listed, 12 Amps |
| | 14 | KDRULA5HE01 | 5%, 480 V, Enclosed Type 1 Line Reactor, UL Listed, 14 Amps |
| | 27 | KDRULB2HE01 | 5%, 480 V, Enclosed Type 1 Line Reactor, UL Listed, 27 Amps |
| | 27 | KDRULC3HE01 | 5%, 480 V, Enclosed Type 1 Line Reactor, UL Listed, 27 Amps |
| | 35 | KDRULC1HE01 | 5%, 480 V, Enclosed Type 1 Line Reactor, UL Listed, 35 Amps |
| | 45 | KDRULE2HE01 | 5%, 480 V, Enclosed Type 1 Line Reactor, UL Listed, 45 Amps |
| | 60 | KDRULF4HE01 | 5%, 480 V, Enclosed Type 1 Line Reactor, UL Listed, 60 Amps |
| | 85 | KDRULF1HE01 | 5%, 480 V, Enclosed Type 1 Line Reactor, UL Listed, 85 Amps |
| | 77 | KDRULF2HE01 | 5%, 480 V, Enclosed Type 1 Line Reactor, UL Listed, 77 Amps |
| | 100 | KDRULH2HE01 | 5%, 480 V, Enclosed Type 1 Line Reactor, UL Listed, 100 Amps |
| | 125 | KDRULI2HE01 | 5%, 480 V, Enclosed Type 1 Line Reactor, UL Listed, 125 Amps |
| | 160 | KDRULG3HE01 | 5%, 480 V, Enclosed Type 1 Line Reactor, UL Listed, 160 Amps |
| | 185 | KDRULG1HE01 | 5%, 480 V, Enclosed Type 1 Line Reactor, UL Listed, 185 Amps |
| | 240 | KDRULJ1HE01 | 5%, 480 V, Enclosed Type 1 Line Reactor, UL Listed, 240 Amps |
| | 310 | KDRULL1HE01 | 5%, 480 V, Enclosed Type 1 Line Reactor, UL Listed, 310 Amps |
| | 365 | KDRULL2HE01 | 5%, 480 V, Enclosed Type 1 Line Reactor, UL Listed, 365 Amps |
| | 435 | KDRULL3HE01 | 5%, 480 V, Enclosed Type 1 Line Reactor, UL Listed, 435 Amps |
| | 480 | KDRULL4HE01 | 5%, 480 V, Enclosed Type 1 Line Reactor, UL Listed, 480 Amps |

# P-SERIES VFD STAND ALONE - ACCESSORIES

## LINE REACTORS 600 V (STAND ALONE DRIVES ONLY)

UL/NEMA 1 Enclosure

| Voltage | Amps | Model No. | Description |
|---|---|---|---|
| 600 V | 10.4 | KDRULA48LE01 | 3%, 600 V, Enclosed Type 1 Line Reactor, UL Listed, 10.4 Amps |
| | 11 | KDRULA49LE01 | 3%, 600 V, Enclosed Type 1 Line Reactor, UL Listed, 11 Amps |
| | 19.5 | KDRULA45LE01 | 3%, 600 V, Enclosed Type 1 Line Reactor, UL Listed, 19.5 Amps |
| | 24 | KDRULB44LE01 | 3%, 600 V, Enclosed Type 1 Line Reactor, UL Listed, 24 Amps |
| | 30 | KDRULB43LE01 | 3%, 600 V, Enclosed Type 1 Line Reactor, UL Listed, 30 Amps |
| | 32 | KDRULD42LE01 | 3%, 600 V, Enclosed Type 1 Line Reactor, UL Listed, 32 Amps |
| | 41 | KDRULC43LE01 | 3%, 600 V, Enclosed Type 1 Line Reactor, UL Listed, 41 Amps |
| | 52 | KDRULC44LE01 | 3%, 600 V, Enclosed Type 1 Line Reactor, UL Listed, 52 Amps |
| | 62 | KDRULF46LE01 | 3%, 600 V, Enclosed Type 1 Line Reactor, UL Listed, 62 Amps |
| | 77 | KDRULF47LE01 | 3%, 600 V, Enclosed Type 1 Line Reactor, UL Listed, 77 Amps |
| | 99 | KDRULF45LE01 | 3%, 600 V, Enclosed Type 1 Line Reactor, UL Listed, 99 Amps |
| | 125 | KDRULH43LE01 | 3%, 600 V, Enclosed Type 1 Line Reactor, UL Listed, 125 Amps |

## OUTPUT REACTORS 480 V (STAND ALONE DRIVES ONLY)

UL/NEMA 1 Enclosure

| Voltage | Amps | Model No. | Description |
|---|---|---|---|
| 480 V | 4 | KDRULA1PE01 | 3%, 480 V, Enclosed Type 1 Load Reactor, UL Listed, 4 Amps |
| | 6 | KDRULA2PE01 | 3%, 480 V, Enclosed Type 1 Load Reactor, UL Listed, 6 Amps |
| | 8 | KDRULA3PE01 | 3%, 480 V, Enclosed Type 1 Load Reactor, UL Listed, 8 Amps |
| | 12 | KDRULA4PE01 | 3%, 480 V, Enclosed Type 1 Load Reactor, UL Listed, 12 Amps |
| | 16 | KDRULB1PE01 | 3%, 480 V, Enclosed Type 1 Load Reactor, UL Listed, 16 Amps |
| | 21 | KDRULD1PE01 | 3%, 480 V, Enclosed Type 1 Load Reactor, UL Listed, 21 Amps |
| | 27 | KDRULD2PE01 | 3%, 480 V, Enclosed Type 1 Load Reactor, UL Listed, 27 Amps |
| | 35 | KDRULD3PE01 | 3%, 480 V, Enclosed Type 1 Load Reactor, UL Listed, 35 Amps |
| | 45 | KDRULD4PE01 | 3%, 480 V, Enclosed Type 1 Load Reactor, UL Listed, 45 Amps |
| | 55 | KDRULC1PE01 | 3%, 480 V, Enclosed Type 1 Load Reactor, UL Listed, 55 Amps |
| | 80 | KDRULF1PE01 | 3%, 480 V, Enclosed Type 1 Load Reactor, UL Listed, 80 Amps |
| | 80 | KDRULF2PE01 | 3%, 480 V, Enclosed Type 1 Load Reactor, UL Listed, 80 Amps |
| | 110 | KDRULF3PE01 | 3%, 480 V, Enclosed Type 1 Load Reactor, UL Listed, 110 Amps |
| | 130 | KDRULH1PE01 | 3%, 480 V, Enclosed Type 1 Load Reactor, UL Listed, 130 Amps |
| | 160 | KDRULI1PE01 | 3%, 480 V, Enclosed Type 1 Load Reactor, UL Listed, 160 Amps |
| | 200 | KDRULI2PE01 | 3%, 480 V, Enclosed Type 1 Load Reactor, UL Listed, 200 Amps |
| | 250 | KDRULG1PE01 | 3%, 480 V, Enclosed Type 1 Load Reactor, UL Listed, 250 Amps |
| | 310 | KDRULJ1PE01 | 3%, 480 V, Enclosed Type 1 Load Reactor, UL Listed, 310 Amps |
| | 365 | KDRULJ2PE01 | 3%, 480 V, Enclosed Type 1 Load Reactor, UL Listed, 365 Amps |
| | 420 | KDRULL1PE01 | 3%, 480 V, Enclosed Type 1 Load Reactor, UL Listed, 420 Amps |
| | 480 | KDRULL2PE01 | 3%, 480 V, Enclosed Type 1 Load Reactor, UL Listed, 480 Amps |

*NOTE: For motor leads longer than 1000' on 200 V/230 V and 100' on 480 V, please contact Franklin Control Systems for output reactor or output filter sizing.*

FRANKLIN CONTROL SYSTEMS

# P-SERIES VFD STAND ALONE - ACCESSORIES

## OUTPUT REACTORS 600 V (STAND ALONE DRIVES ONLY)

UL/NEMA 1 Enclosure

| Voltage | Amps | Model No. | Description |
|---|---|---|---|
| 600 V | 4 | KDRULA31PE01 | 575 V, UL Type 1 Enclosed Output Reactor, 4 Amps |
| | 4 | KDRULA35PE01 | 575 V, UL Type 1 Enclosed Output Reactor, 4 Amps |
| | 8 | KDRULA33PE01 | 575 V, UL Type 1 Enclosed Output Reactor, 8 Amps |
| | 12 | KDRULA34PE01 | 575 V, UL Type 1 Enclosed Output Reactor, 12 Amps |
| | 12 | KDRULA36PE01 | 575 V, UL Type 1 Enclosed Output Reactor, 12 Amps |
| | 18 | KDRULD31PE01 | 575 V, UL Type 1 Enclosed Output Reactor, 18 Amps |
| | 25 | KDRULD32PE01 | 575 V, UL Type 1 Enclosed Output Reactor, 25 Amps |
| | 27 | KDRULD35PE01 | 575 V, UL Type 1 Enclosed Output Reactor, 27 Amps |
| | 35 | KDRULD33PE01 | 575 V, UL Type 1 Enclosed Output Reactor, 35 Amps |
| | 45 | KDRULD34PE01 | 575 V, UL Type 1 Enclosed Output Reactor, 45 Amps |
| | 55 | KDRULC31PE01 | 575 V, UL Type 1 Enclosed Output Reactor, 55 Amps |
| | 80 | KDRULF31PE01 | 575 V, UL Type 1 Enclosed Output Reactor, 80 Amps |
| | 80 | KDRULF32PE01 | 575 V, UL Type 1 Enclosed Output Reactor, 80 Amps |
| | 130 | KDRULH31PE01 | 575 V, UL Type 1 Enclosed Output Reactor, 130 Amps |

## OUTPUT FILTERS (STAND ALONE DRIVES ONLY)

UL/NEMA 1 Enclosure

| Voltage | Amps | Model No. | Wt. (lbs) | Description |
|---|---|---|---|---|
| 240-600 V | 2 | V1K2A01 | 11 | V1K, KLC Series Output Filter, N1 Enclosed, 240-600 V |
| | 3 | V1K3A01 | 11 | V1K, KLC Series Output Filter, N1 Enclosed, 240-600 V |
| | 4 | V1K4A01 | 11 | V1K, KLC Series Output Filter, N1 Enclosed, 240-600 V |
| | 6 | V1K6A01 | 11 | V1K, KLC Series Output Filter, N1 Enclosed, 240-600 V |
| | 8 | V1K8A01 | 11 | V1K, KLC Series Output Filter, N1 Enclosed, 240-600 V |
| | 12 | V1K12A01 | 11 | V1K, KLC Series Output Filter, N1 Enclosed, 240-600 V |
| | 18 | V1K18A01 | 15 | V1K, KLC Series Output Filter, N1 Enclosed, 240-600 V |
| | 21 | V1K21A01 | 15 | V1K, KLC Series Output Filter, N1 Enclosed, 240-600 V |
| | 25 | V1K25A01 | 15 | V1K, KLC Series Output Filter, N1 Enclosed, 240-600 V |
| | 27 | V1K27A01 | 15 | V1K, KLC Series Output Filter, N1 Enclosed, 240-600 V |
| | 35 | V1K35A01 | 23 | V1K, KLC Series Output Filter, N1 Enclosed, 240-600 V |
| | 45 | V1K45A01 | 23 | V1K, KLC Series Output Filter, N1 Enclosed, 240-600 V |
| | 55 | V1K55A01 | 23 | V1K, KLC Series Output Filter, N1 Enclosed, 240-600 V |
| | 80 | V1K80A01 | 29 | V1K, KLC Series Output Filter, N1 Enclosed, 240-600 V |
| | 110 | V1K110A01 | 68 | V1K, KLC Series Output Filter N1 Enclosed, 240-600 V |
| | 130 | V1K130A01 | 83 | V1K, KLC Series Output Filter N1 Enclosed, 240-600 V |
| | 160 | V1K160A01 | 83 | V1K, KLC Series Output Filter, N1 Enclosed, 240-600 V |
| | 200 | V1K200A01 | 93 | V1K, KLC Series Output Filter, N1 Enclosed, 240-600 V |
| | 250 | V1K250A01 | 93 | V1K, KLC Series Output Filter, N1 Enclosed, 240-600 V |
| | 305 | V1K305A01 | 117 | V1K, KLC Series Output Filter, N1 Enclosed, 240-600 V |
| | 362 | V1K362A01 | 117 | V1K, KLC Series Output Filter, N1 Enclosed, 240-600 V |
| | 420 | V1K420A01 | 132 | V1K, KLC Series Output Filter, N1 Enclosed, 240-600 V |
| | 480 | V1K480A01 | 138 | V1K, KLC Series Output Filter, N1 Enclosed, 240-600 V |
| | 600 | V1K600A01 | 168 | V1K, KLC Series Output Filter, N1 Enclosed, 240-600 V |
| | 750 | V1K750A01 | 180 | V1K, KLC Series Output Filter, N1 Enclosed, 240-600 V |

# P-SERIES VFD STAND ALONE - DESCRIPTION KEY

## DRIVES & CONTROLS

| Code | Description |
|---|---|
| 1-PH / 1Ø | Single-phase |
| 3FC | Three Float Switch |
| 3-PH / 3Ø | Three-phase |
| 4FSw | Four Float Switch |
| A | Amps |
| AC | Alternating Current |
| Alt | Alternating |
| APX | Advanced Duplex Pump Controller |
| Aux Cont | Auxiliary Contact |
| BCN | Beacon |
| BZR | Buzzer |
| CB | Circuit Breaker |
| CB Disc | Circuit Breaker Disconnect |
| CENP | Centrifugal |
| CH | Chassis |
| CLK | Programmable Clock |
| Combination | Comes with a disconnect |
| CPT | Control Power Transformer |
| DC | Direct Current |
| DHM | Digital Hour Meters |
| DPX | Duplex Alternating Pump Controller |
| ENET | Ethernet Cable |
| EOL | Electronic Overload |
| EPS | Economy Pump Starter |
| FG | Fiberglass |
| FLA | Full Load Amps |
| FPL | Fault Pilot Light |
| HOA | Hand/Off/Auto |
| HP | Horsepower |
| HZ | Hertz |
| G | Disconnect rating |

| Code | Description |
|---|---|
| HRN | Horn |
| J | Electronic Overload |
| K | Thermal Overload |
| KPD | Keypad |
| LED | Light Emitting Diode |
| LR | Line Reactor |
| LSR | Leak Seal Relays |
| MCCB | Molded Case Circuit Breaker |
| MCP | Motor Circuit Protector |
| MCS | Multi-Contactor Starters |
| MMS | Manual Motor Starter |
| MMS Disc | Manual Motor Starter Disconnect |
| MS6 | Digital Soft Starter |
| MTR | Motor |
| N1 | NEMA 1 |
| N3R | NEMA 3 |
| N4 | NEMA 4 |
| N4X/N4XF | NEMA 4 Fiberglass |
| NC | Normally Closed |
| NO | Normally Open |
| Non-Combination | Comes without a disconnect |
| OF | Output Filter |
| OL | Overload |
| OR | Output (Load) Reactor |
| PCB | Printed Control Board |
| PLC | Programmable Logic Controller |
| PW | Part-winding |
| RLY | Relay |
| RPL | Run Pilot Light |
| RST | Reset |

| Code | Description |
|---|---|
| RVS | Analog Soft Starter |
| S0 | Contactor NEMA Size 00 |
| S00 | Contactor NEMA Size 00 |
| S0P | Contactor NEMA Size 0+ |
| S1 | Contactor NEMA Size 1 |
| S2 | Contactor NEMA Size 2 |
| S3 | Contactor NEMA Size 3 |
| S3P | Contactor NEMA Size 3+ |
| S4 | Contactor NEMA Size 4 |
| S5 | Contactor NEMA Size 5 |
| S5P | Contactor NEMA Size 5+ |
| SCM | Starter Control Module |
| SFA | Service Factor Amps |
| SMS | SubMonitor Connect Pump Starter |
| SPB | Start Push button |
| SPD | Speed Potentiometer |
| SSP | SMARTSTART™ Starter |
| SPS | Starndard Pump Starter |
| STSP | Start/Stop Push button |
| SUBP | Submersible |
| SW | Switch |
| TMR | Timer |
| TOL | Thermal Overload |
| UL | Underwriters Laboratories |
| UPS | Universal Power Supply |
| V | Voltage |
| VA | Volt/Amp |
| VFD | Variable Frequency Drive |
| WD | Wye-Delta |

FRANKLIN CONTROL SYSTEMS

# VDP VARIABLE DUPLEX PUMP PACKAGE

1Ø & 3Ø Input, 200-230VAC & 480VAC, 1-125HP
Phase Conversion Capabilities, UL Type 3R Enclosure

The Variable Duplex VFD Pump package is ideal for domestic water pump and booster pump systems. Franklin Control Systems designed the package specifically to maintain a pressure set point based on sensor feedback using internal PID control. This package provides the most economic pump control solution by reducing both energy and maintenance costs.

## STANDARD FEATURES

- Maintain System Pressure with Single Sensor Feedback
- Integrated controls lead/lag & alternating operation
- Optional circuit breaker or service entrance rated MCCB
- Dual pressure transducers provide feedback for PID control loops
- Automatic alternating control
- Hand/Off/Auto switches for independent local or remote operation
- Adjustable time for lag start delay and alternation settings
- Fault contact output allow integration with external devices

## OPTIONS

- Run pilot lights
- Fault pilot lights
- Off pilot lights
- Door-mounted potentiometer
- Door-mounted keypad
- Door-mounted keypad with Type 4X or 3R cover

# VDP VARIABLE DUPLEX PUMP PACKAGE - ORDERING & SIZING INFORMATION

## 3-PHASE (200~230 V)

UL Type 3R

| Standard Duty (VT) | | | Part No. | 3% Line Reactor** |
|---|---|---|---|---|
| 1Ø HP* | 3Ø HP | FLA | | |
| 1 | 2 | 34 | CIE3R-VDP002-P2 | VFD-KDRB27L |
| 1.5 | 3 | 48 | CIE3R-VDP003-P2 | VFD-KDRB28L |
| 2 | 5 | 34 | CIE3R-VDP005-P2 | VFD-KDRB22L |
| 3 | 7.5 | 48 | CIE3R-VDP007-P2 | VFD-KDRB23L |
| 5 | 10 | 64 | CIE3R-VDP010-P2 | VFD-KDRD25L |
| 7.5 | 15 | 92 | CIE3R-VDP015-P2 | VFD-KDRD24L |
| 10 | 20 | 120 | CIE3R-VDP020-P2 | VFD-KDRD26L |
| 10 | 25 | 148 | CIE3R-VDP025-P2 | VFD-KDRC22L |
| 15 | 30 | 176 | CIE3R-VDP030-P2 | VFD-KDRF24L |
| 20 | 40 | 230 | CIE3R-VDP040-P2 | VFD-KDRF25L |

** Maximum HP of 3-phase motor in single phase power applications*
***Optional*

## 3-PHASE (380~480 V)

UL Type 3R

| Standard Duty (VT) | | | Part No. | 3% Line Reactor** |
|---|---|---|---|---|
| 1Ø HP* | 3Ø HP | FLA | | |
| 1 | 2 | 8 | CIE3R-VDP002-P4 | VFD-KDRA1L |
| 1.5 | 3 | 12 | CIE3R-VDP003-P4 | VFD-KDRA2L |
| 2 | 5 | 20 | CIE3R-VDP005-P4 | VFD-KDRA3L |
| 3 | 7.5 | 24 | CIE3R-VDP007-P4 | VFD-KDRA4L |
| 5 | 10 | 32 | CIE3R-VDP010-P4 | VFD-KDRA5L |
| 7.5 | 15 | 48 | CIE3R-VDP015-P4 | VFD-KDRB2L |
| 10 | 20 | 60 | CIE3R-VDP020-P4 | VFD-KDRB1L |
| 10 | 25 | 78 | CIE3R-VDP025-P4 | VFD-KDRD1L |
| 15 | 30 | 90 | CIE3R-VDP030-P4 | VFD-KDRD2L |
| 20 | 40 | 122 | CIE3R-VDP040-P4 | VFD-KDRC1L |
| 20 | 50 | 150 | CIE3R-VDP050-P4 | VFD-KDRF2L |
| 20 | 60 | 180 | CIE3R-VDP060-P4 | VFD-KDRF4L |
| 20 | 75 | 200 | CIE3R-VDP075-P4 | VFD-KDRF3L |
| 20 | 100 | 300 | CIE3R-VDP100-P4 | VFD-KDRH3L |
| 20 | 125 | 330 | CIE3R-VDP125-P4 | VFD-KDRH2L |
| 20 | 150 | 370 | CIE3R-VDP150-P4 | VFD-KDRH1L |
| 20 | 200 | 480 | CIE3R-VDP200-P4 | VFD-KDRG3L |
| 20 | 250 | 608 | CIE3R-VDP250-P4 | VFD-KDRG1L |

** Maximum HP of 3-phase motor in single phase power applications*
***Optional*

## OPTIONS (FACTORY INSTALLABLE)

| Part No. | Description |
|---|---|
| VDP-RPL/24 | Run Pilot Light for Type 12 & 3R (Green Standard) |
| VDP-FLT/24 | Fault Pilot Light for Type 12 & 3R (Red Standard) |
| VFD-OPL/24 | Off Pilot Light for Type 12 & 3R (Red Standard) |
| VFD-SPD | Door Mounted Speed Potentiometer |
| VFD-LTA | Surge Arrestor |
| VFD-KPD | Door Mounted Keypad |
| VFD-KPD/4X | Door Mounted Keypad with Type 4X Cover |
| VFD-KPD-3R | Door Mounted Keypad with Type 3R Cover |

*NOTE: 2-line reactors will be needed for VDP*

***VFD packages are not derated for hp. A 40 hp package contains a 40 hp VFD. For sizing to account for heat defation or submersible motor application, please contact factory.***

MENU

Franklin Electric

franklinwater.com

M1688 11-16